HOLOPHANE®
LEADER IN LIGHTING SOLUTIONS

Catalog Number	
Notes	Type

* Shown with MS Housing

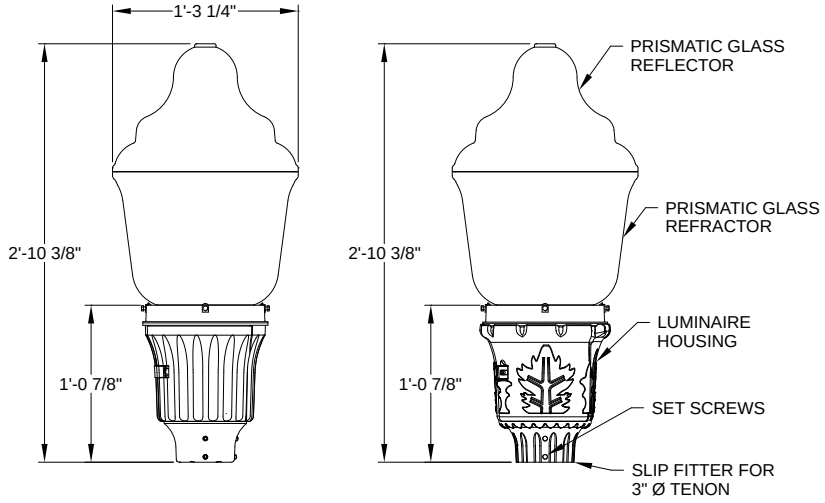

Maximum weight - 64 lbs
Maximum effective projected area - 1.38 sq. ft.

GPD3

Granville Premier LED3

SPECIFICATIONS

General Description

The GranVille Premier LED 3 is designed for ease of maintenance with the plug-in electrical module common to each of the luminaires in Holophane's Utility Luminaire Series. The traditional acorn-shaped luminaire, while reminiscent of the 1920's, contains a powerful, stalk-mounted Chip-On-Board LED platform with a precision optical system that maximizes post spacings while maintaining uniform illumination.

Mechanical Specifications

The luminaire housing shall:

- Be heavy grade A360 cast aluminum (aluminum with <1% copper)
- IP55 rated housing provides tool-less access with a spring-loaded latch
- Incorporate a hidden hinge door allowing the door to swing open and remain open
- Offer an EEI- NEMA twist lock photocontrol receptacle, the housing contains a tempered glass window to allow light to reach the cell
- Mount to slip-fitter that will accept 3" high by 2-7/8" to 3-1/8" O.D. pole tenon
- Provide four uniquely designed stainless steel spring clips, enclosed in a clear polyvinyl chloride sleeve and adjusted by 1/4-20 hex-head bolts that securely cradle the prismatic glass refractor. The same ¼-20 bolts also support the decorative rib and banding assembly.

The finish shall:

- Utilize a polyester power coat paint to ensure maximum durability
- Meet 5,000-hour salt spray
- Offer Tiger Drylac finishes that are applied by a Tiger Drylac certified facility.

Electrical Specifications

The driver shall meet the following requirements:

- Certified by UL or CSA for wet locations
- A factory programmable electronic driver with 0-10V dimming control leads
- LEDs shall have a minimum of 70 CRI and available in 2700K, 3000K, 4000K, and 5000K CCT
- The electrical system shall be designed to meet ANSI/IEEE C62.41.2 and shall offer a 10kV/5kA surge protection, fail off, as standard with an upgradable 20kV/10kA surge protection, fail off with indicator light, option
- Lumen output can be customized prior to manufacturing by way of FPDxx Options
- The electrical components are mounted on an aluminum plate that is removeable with minimum use of tools. A matching five conductor plug connects to the receptacle in the luminaire housing to complete the wiring. For photoelectric operation, the electrical module is provided with an EEI-NEMA twist-lock photocell receptacle.

Optical Specifications

The optical system is IP66 rated and consists of a precisely molded thermal resistant borosilicate glass refractor and top reflector mounted within the decorative glass optic. The top reflector redirects over 50% of the upward light into the controlling refractor while allowing a soft up-light component to define the traditional acorn shape of the luminaire. The lower refractor uses precisely molded prisms to maximize the pole spacings while maintaining uniform illuminance. Two refractors are available, designed for IES type III and V distributions. Lunar Optics shielding is available for asymmetric and symmetric distributions.

Control Options

The control options shall include, but not limited to, the following:

- Field adjustable output to adjust output to luminaire - A0
- Long life photocontrol, 20 years – PCLL, P34 and P48 with DTL
- 3 and 7 pin receptacles internally in housing (PR3, PR7) or inside glass mounted (PR7E)
- nLight Air rSBOR6 outdoor fixture-mounted motion and photo-sensor, features a dual radio to communicate wirelessly to other nLight Air devices for group response to motion, on/off control in response to daylight and by switch – RSBOR6
- Fixture embedded nLight Air network interface for individual fixture control and dimming - NLAIR2.

Certification and Standards

- Luminaire shall be UL or CSA listed.
- Suitable for operation in an ambient temperature up to 40°C / 105°F per UL or CSA certification
- LM79 compliant
- DesignLights Consortium® (DLC) Premium qualified product and DLC qualified product. Not all versions of this product may be DLC Premium qualified or DLC qualified. Please check with the DLC Qualified Products List at www.designlights.org/QPL to confirm which versions are qualified.

Warranty – 5 Years Limited

Complete warranty terms located at:
www.acuitybrands.com/support/customer-support/terms-and-conditions

Note: Actual performance may differ as a result of end-user environment and application. All values are design or typical values, measured under laboratory conditions at 25 °C.

© 2020 Acuity Brands Lighting, Inc. All rights reserved. Rev. 06/26/20 Specifications subject to change without notice.

ORDERING INFORMATION

Example: GPD3 P30 30K MVOLT MS BK GL3 RB ST TBK AO

Series	LED Performance Package	LED Color temperature	Voltage	Housing Style
GPD3 Granville Premier LED3	P10 3,400 nominal lumens P20 5,400 nominal lumens P30 8,800 nominal lumens P40 11,700 nominal lumens P50 14,000 nominal lumens	27K 2700K CCT 30K 3000K CCT 40K 4000K CCT 50K 5000K CCT	MVOLT Auto-Sensing 120-277V 50/60HZ HVOLT Auto-Sensing 347-480V 50/60HZ	MS Modern Style Swing Open Design LS Leaf Style Swing Open Design

Housing Color	Optics	Trim	Finial	Trim Color
BK Black	GL3 Glass, Type III	(Blank) No Trim	(Blank) No Finial	TBK Black
BZ Bronze	GL5 Glass, Type V	RB Ribs & Band	BL Ball	TBZ Bronze
GH Graphite	GL3LU Glass, Type III Lunar Optics		CL Clear	TGL Gold
GN Green	GL5LU Glass, Type V Lunar Optics		EG Eagle	TGH Graphite
GR Grey			FL Flower	TGN Green
PP Prime Paint			PN Pawn	TGR Grey
WH White			CR Cross	TPP Prime Paint
CMC CustomMatchColor Finish			ST Standard	TWH White
XX STD Finish, TBD			RM Roman Cross	TCMC Custom Match Color Finish
RAL RAL Specified				TRAL RAL Color
				TXX STD Finish, TBD

Options: *Option Compatibility Matrix on page 3 of 4*

CONTROLS OPTIONS

AO	Field Adjustable Output
DE	ROAM 0-10 Volt Dimming Controls, includes NEMA twistlock photocontrol receptacle
PR3	NEMA twistlock photocontrol receptacle - 3 pin
PR7	NEMA twistlock dimming photocontrol receptacle - 7 pin
PR7E	NEMA twistlock dimming photocontrol receptacle - 7 Pin (Under Glass)
PCLL	Long Life DTL Twistlock Photocontrol for Solid State, MVOLT
P34	Long Life DTL Twistlock Photocontrol for Solid State, 340V
P48	Long Life DTL Twistlock Photocontrol for Solid State, 480V
SH	Shorting Cap
RSBOR6	nLight Motion Sensing Photocontrols
NLAIR2	nLight RIO 2.0 Antenna

DRIVER ELECTRICAL OPTIONS

FPDxx	Factory Programmed Driver
20KV	Extreme surge protection 20kV/10kA, fail off with indicator light

PREWIRED LEAD OPTIONS

L1H	1.5 ft prewired leads
L03	3ft prewired leads
L10	10 ft prewired leads
L20	20 ft prewired leads
L25	25 ft prewired leads
L30	30 ft prewired leads

COVER OPTIONS

FC	Full Cover
MC	Mayfield Half Cover

NEMA LABEL OPTIONS

NL1X1	1" X 1" ANSI Wattage Label
NL2X2	2" X 2" ANSI Wattage Label

Accessories: *Order as separate catalog number.*

DECORATIVE BAND OPTIONS

GVBANDX Decorative Band

(Field installed. For use with units without factory installed ribs and band and no finial. Insert finial color for X)

HOUSE-SIDE SHIELD OPTIONS

GVDHSS90	House Side Shield Solid 90˚
GVDHSS12	House Side Shield Solid 120˚
GVDHSS18	House Side Shield Solid 180˚
GVDHSL90	House Side Shield Solid 90˚ (Lunar)
GVDHSL12	House Side Shield Solid 120˚ (Lunar)
GVDHSL18	House Side Shield Solid 180˚ (Lunar)

© 2020 Acuity Brands Lighting, Inc. All rights reserved. Rev. 06/26/20 Specifications subject to change without notice.

OPTIONS MATRIX

GPD3 (Utility Housing)		Housing Style		LED Package					Voltage		Distribution				Trims	Options													Covers	
		MS	LS	P10	P20	P30	P40	P50	MVOLT	HVOLT	GL3	GL5	GL3LU	GL5LU	RB	AO	DE	FPDxx	PR3	PR7	PR7E	PCLL	P34	P48	SH	RSBOR6	NLAIR2	20kV	FC	MC
Housing Style	MS		N	Y	Y	Y	Y	Y	Y	Y	Y	Y	Y	Y	Y	Y	Y	Y	Y	Y	Y	Y	Y	Y	Y	Y	Y	Y	Y	Y
	LS	N		Y	Y	Y	Y	Y	Y	Y	Y	Y	Y	Y	Y	Y	Y	Y	Y	Y	Y	Y	Y	Y	Y	Y	Y	Y	Y	Y
LED Package	P10	Y	Y		N	N	N	N	Y	Y	Y	Y	Y	Y	Y	Y	Y	Y	Y	Y	Y	Y	Y	Y	Y	Y	N	Y	Y	Y
	P20	Y	Y	N		N	N	N	Y	Y	Y	Y	Y	Y	Y	Y	Y	Y	Y	Y	Y	Y	Y	Y	Y	Y	Y	Y	Y	Y
	P30	Y	Y	N	N		N	N	Y	Y	Y	Y	Y	Y	Y	Y	Y	Y	Y	Y	Y	Y	Y	Y	Y	Y	Y	Y	Y	Y
	P40	Y	Y	N	N	N		N	Y	Y	Y	Y	Y	Y	Y	Y	Y	Y	Y	Y	Y	Y	Y	Y	Y	Y	Y	Y	Y	Y
	P50	Y	Y	N	N	N	N		Y	Y	Y	Y	Y	Y	Y	Y	Y	Y	Y	Y	Y	Y	Y	Y	Y	Y	Y	Y	Y	Y
Voltage	MVOLT	Y	Y	Y	Y	Y	Y	Y		N	Y	Y	Y	Y	Y	Y	Y	Y	Y	Y	Y	Y	N	N	Y	Y	Y	Y	Y	Y
	HVOLT	Y	Y	Y	Y	Y	Y	Y	N		Y	Y	Y	Y	Y	Y	N	Y	Y	Y	Y	N	N	N	Y	Y	N	Y	Y	Y
Distributions	GL3	Y	Y	Y	Y	Y	Y	Y	Y	Y		N	N	N	Y	Y	Y	Y	Y	Y	Y	Y	Y	Y	Y	Y	Y	Y	Y	Y
	GL5	Y	Y	Y	Y	Y	Y	Y	Y	Y	N		N	N	Y	Y	Y	Y	Y	Y	Y	Y	Y	Y	Y	Y	Y	Y	Y	Y
	GL3LU	Y	Y	Y	Y	Y	Y	Y	Y	Y	N	N		N	Y	Y	Y	Y	Y	Y	N	Y	Y	Y	Y	Y	N	Y	Y	Y
	GL5LU	Y	Y	Y	Y	Y	Y	Y	Y	Y	N	N	N		Y	Y	Y	Y	Y	Y	N	Y	Y	Y	Y	Y	N	Y	Y	Y
Trims	RB	Y	Y	Y	Y	Y	Y	Y	Y	Y	Y	Y	Y	Y		Y	Y	Y	Y	Y	Y	Y	Y	Y	Y	Y	Y	Y	Y	Y
Options	AO	Y	Y	Y	Y	Y	Y	Y	Y	Y	Y	Y	Y	Y	Y		N	Y	Y	Y	N	N	N	N	Y	N	N	Y	Y	Y
	DE	Y	Y	Y	Y	Y	Y	Y	Y	N	Y	Y	Y	Y	Y	N		Y	N	N	N	N	N	N	N	N	N	Y	Y	Y
	FPDxx	Y	Y	Y	Y	Y	Y	Y	Y	Y	Y	Y	Y	Y	Y	Y	Y		Y	Y	Y	Y	Y	Y	Y	Y	Y	Y	Y	Y
	PR3	Y	Y	Y	Y	Y	Y	Y	Y	Y	Y	Y	Y	Y	Y	Y	N	Y		N	N	Y	Y	Y	Y	N	N	Y	Y	Y
	PR7	Y	Y	Y	Y	Y	Y	Y	Y	Y	Y	Y	Y	Y	Y	Y	N	Y	N		N	Y	Y	Y	Y	N	N	Y	Y	Y
	PR7E	Y	Y	Y	Y	Y	Y	Y	Y	Y	Y	Y	N	N	Y	N	N	Y	N	N		Y	Y	Y	Y	N	N	Y	N	N
	PCLL	Y	Y	Y	Y	Y	Y	Y	Y	N	Y	Y	Y	Y	Y	N	N	Y	Y	Y	Y		N	N	N	N	N	Y	Y	Y
	P34	Y	Y	Y	Y	Y	Y	Y	N	N	Y	Y	Y	Y	Y	N	N	Y	Y	Y	Y	N		N	N	N	N	Y	Y	Y
	P48	Y	Y	Y	Y	Y	Y	Y	N	N	Y	Y	Y	Y	Y	N	N	Y	Y	Y	Y	N	N		Y	N	N	Y	Y	Y
	SH	Y	Y	Y	Y	Y	Y	Y	Y	Y	Y	Y	Y	Y	Y	Y	N	Y	Y	Y	Y	N	N	Y		N	N	Y	Y	Y
	RSBOR6	Y	Y	Y	Y	Y	Y	Y	Y	Y	Y	Y	Y	Y	Y	N	N	Y	N	N	N	N	N	N	N		N	Y	Y	Y
	NLAIR2	Y	Y	N	Y	Y	Y	Y	Y	N	Y	Y	N	N	Y	N	N	Y	N	N	N	N	N	N	N	N		Y	N	N
	20kV	Y	Y	Y	Y	Y	Y	Y	Y	Y	Y	Y	Y	Y	Y	Y	Y	Y	Y	Y	Y	Y	Y	Y	Y	Y	Y		Y	Y
Covers	FC	Y	Y	Y	Y	Y	Y	Y	Y	Y	Y	Y	Y	Y	Y	Y	Y	Y	Y	Y	N	Y	Y	Y	Y	Y	N	Y		N
	MC	Y	Y	Y	Y	Y	Y	Y	Y	Y	Y	Y	Y	Y	Y	Y	Y	Y	Y	Y	N	Y	Y	Y	Y	Y	N	Y	N	
Finials	BL	Y	Y	Y	Y	Y	Y	Y	Y	Y	Y	Y	Y	Y	Y	Y	Y	Y	Y	Y	Y	Y	Y	Y	Y	Y	Y	Y	Y	Y
	CL	Y	Y	Y	Y	Y	Y	Y	Y	Y	Y	Y	Y	Y	Y	Y	Y	Y	Y	Y	Y	Y	Y	Y	Y	Y	Y	Y	Y	Y
	EG	Y	Y	Y	Y	Y	Y	Y	Y	Y	Y	Y	Y	Y	Y	Y	Y	Y	Y	Y	Y	Y	Y	Y	Y	Y	Y	Y	Y	Y
	FL	Y	Y	Y	Y	Y	Y	Y	Y	Y	Y	Y	Y	Y	Y	Y	Y	Y	Y	Y	Y	Y	Y	Y	Y	Y	Y	Y	Y	Y
	NONE	Y	Y	Y	Y	Y	Y	Y	Y	Y	Y	Y	Y	Y	Y	Y	Y	Y	Y	Y	Y	Y	Y	Y	Y	Y	Y	Y	N	N
	PN	Y	Y	Y	Y	Y	Y	Y	Y	Y	Y	Y	Y	Y	Y	Y	Y	Y	Y	Y	Y	Y	Y	Y	Y	Y	Y	Y	Y	Y
	CR	Y	Y	Y	Y	Y	Y	Y	Y	Y	Y	Y	Y	Y	Y	Y	Y	Y	Y	Y	Y	Y	Y	Y	Y	Y	Y	Y	Y	Y
	ST	Y	Y	Y	Y	Y	Y	Y	Y	Y	Y	Y	Y	Y	Y	Y	Y	Y	Y	Y	Y	Y	Y	Y	Y	Y	Y	Y	Y	Y
	RM	Y	Y	Y	Y	Y	Y	Y	Y	Y	Y	Y	Y	Y	Y	Y	Y	Y	Y	Y	Y	Y	Y	Y	Y	Y	Y	Y	Y	Y
House-Side Shield	GVDHSS90	Y	Y	Y	Y	Y	Y	Y	Y	Y	Y	Y	N	N	Y	Y	Y	Y	Y	Y	Y	Y	Y	Y	Y	Y	Y	Y	Y	Y
	GVDHSS12	Y	Y	Y	Y	Y	Y	Y	Y	Y	Y	Y	N	N	Y	Y	Y	Y	Y	Y	Y	Y	Y	Y	Y	Y	Y	Y	Y	Y
	GVDHSS18	Y	Y	Y	Y	Y	Y	Y	Y	Y	Y	Y	N	N	Y	Y	Y	Y	Y	Y	Y	Y	Y	Y	Y	Y	Y	Y	Y	Y
	GVDHSL90	Y	Y	Y	Y	Y	Y	Y	Y	Y	N	N	Y	Y	Y	Y	Y	Y	Y	Y	N	Y	Y	Y	Y	Y	N	Y	Y	Y
	GVDHSL12	Y	Y	Y	Y	Y	Y	Y	Y	Y	N	N	Y	Y	Y	Y	Y	Y	Y	Y	N	Y	Y	Y	Y	Y	N	Y	Y	Y
	GVDHSL18	Y	Y	Y	Y	Y	Y	Y	Y	Y	N	N	Y	Y	Y	Y	Y	Y	Y	Y	N	Y	Y	Y	Y	Y	N	Y	Y	Y

MATRIX KEY

N = Combination Not available

Y = Valid Option Combination

ROAM OPTION DETAILS

DE = UL listed components without GPS capability, external antenna is black and includes ROAM capable node only, ROAM service package sold separately via Acuity Controls

© 2020 Acuity Brands Lighting, Inc. All rights reserved. Rev. 06/26/20 Specifications subject to change without notice.

LUMEN AMBIENT TEMPERATURE (LAT) MULTIPLIERS

Use the factors to determine relative lumen output for average ambient temperatures from 0-40°C (32-104°F)

Ambient Temp		Lumen Multiplier	
°C	°F	P10, P20	P30, P40, P50
0	32	1.03	1.04
5	41	1.02	1.04
10	50	1.02	1.03
15	59	1.01	1.02
20	68	1.01	1.01
25	77	1.00	1.00
30	86	0.99	0.99
35	94	0.99	0.98
40	104	0.98	0.97

PROJECTED LED LUMEN MAINTENANCE

Data references the extrapolated performance projections for the platforms noted in 25°C ambient, based on 6,000 hours of LED testing (tested per IESNA LM-80-08 and projected per IESNA TM-21-11). To calculate LLF, use the lumen maintenance factor that corresponds to the desired number of operating hours below. For other lumen maintenance values, contact factory.

Lumen Maintenance - LLD (Same for all LED packages)							
Hours	**0**	**25,000**	**36,000**	**50,000**	***60,000***	***75,000***	***100,000***
Factor	1	0.96	0.94	0.91	*0.90*	*0.87*	*0.83*

The *italicized* data is extrapolated beyond the TM-21 standard.

PERFORMANCE DATA

Performance Package	Distribution	Input Watts	27K (2700K CCT, 70 CRI)					30K (3000K CCT, 70 CRI)					40K (4000K CCT, 70 CRI)					50K (5000K CCT, 70 CRI)				
			Lumens	LPW	B	U	G	Lumens	LPW	B	U	G	Lumens	LPW	B	U	G	Lumens	LPW	B	U	G
P10	GL3	23	2,965	129	1	4	2	3,365	146	1	4	3	3,428	149	1	4	3	3,490	152	1	4	3
	GL5		2,906	126	2	4	2	3,299	143	2	4	2	3,361	146	2	4	2	3,421	149	2	4	2
	GL3LU		2,335	102	1	3	1	2,650	115	1	3	1	2,699	117	1	3	1	2,748	119	1	3	1
	GL5LU		2,269	99	2	3	1	2,575	112	2	3	1	2,623	114	2	3	1	2,670	116	2	3	1
P20	GL3	37	4,698	127	2	4	3	5,333	144	2	5	3	5,432	147	2	5	3	5,531	149	2	5	3
	GL5		4,607	125	3	4	2	5,229	141	3	4	3	5,325	144	3	4	3	5,422	147	3	5	3
	GL3LU		3,700	100	2	3	2	4,200	114	2	3	2	4,278	116	2	3	2	4,356	118	2	3	2
	GL5LU		3,595	97	2	3	1	4,081	110	3	3	2	4,157	112	3	3	2	4,232	114	3	3	2
P30	GL3	57	7,594	133	3	5	4	8,619	151	3	5	4	8,779	154	3	5	4	8,939	157	3	5	4
	GL5		7,445	131	3	5	3	8,444	148	3	5	3	8,607	151	3	5	3	8,764	154	3	5	3
	GL3LU		5,980	105	2	3	2	6,788	119	3	3	3	6,914	121	3	3	3	7,039	123	3	3	3
	GL5LU		5,811	102	3	3	2	6,596	116	3	3	2	6,718	118	3	4	2	6,840	120	3	4	2
P40	GL3	78	10,123	130	3	5	5	11,490	147	3	5	5	11,703	150	3	5	5	11,916	153	3	5	5
	GL5		9,924	127	3	5	3	11,266	144	4	5	4	11,475	147	4	5	4	11,682	150	4	5	4
	GL3LU		7,972	102	3	3	3	9,049	116	3	4	3	9,216	118	3	4	3	9,384	120	3	4	3
	GL5LU		7,746	99	3	4	2	8,792	113	3	4	2	8,955	115	3	4	2	9,118	117	3	4	2
P50	GL3	95	12,067	127	3	5	5	13,697	144	3	5	5	13,950	147	3	5	5	14,204	150	3	5	5
	GL5		11,830	125	4	5	4	13,418	141	4	5	4	13,678	144	4	5	4	13,927	147	4	5	4
	GL3LU		9,503	100	3	4	3	10,786	114	3	4	3	10,986	116	3	4	3	11,186	118	3	4	3
	GL5LU		9,233	97	3	4	3	10,481	110	4	4	3	10,675	112	4	4	3	10,869	114	4	4	3

© 2020 Acuity Brands Lighting, Inc. All rights reserved. Rev. 06/26/20 Specifications subject to change without notice.

FPDXX DATA OPTIONS

FPDxx Setting	Wattage
Standard	23
FPD95	22
FPD90	21

P10 27K			
GL3	GL5	GL3LU	GL5LU
2,965	2,905	2,335	2,269
2,825	2,768	2,224	2,161
2,684	2,630	2,114	2,054

P10 30K			
GL3	GL5	GL3LU	GL5LU
3,365	3,298	2,650	2,575
3,206	3,142	2,525	2,453
3,047	2,985	2,399	2,331

P10 40K			
GL3	GL5	GL3LU	GL5LU
3,428	3,359	2,699	2,623
3,266	3,200	2,572	2,499
3,103	3,041	2,444	2,375

P10 50K			
GL3	GL5	GL3LU	GL5LU
3,490	3,420	2,748	2,671
3,325	3,258	2,618	2,544
3,160	3,096	2,488	2,418

FPDxx Setting	Wattage
Standard	37
FPD95	35
FPD90	34
FPD85	32
FPD80	30
FPD75	28
FPD70	26

P20 27K			
GL3	GL5	GL3LU	GL5LU
4,699	4,604	3,700	3,595
4,478	4,388	3,527	3,427
4,257	4,171	3,352	3,257
4,035	3,953	3,177	3,087
3,811	3,734	3,001	2,916
3,586	3,514	2,824	2,744
3,360	3,293	2,646	2,571

P20 30K			
GL3	GL5	GL3LU	GL5LU
5,333	5,226	4,200	4,081
5,083	4,981	4,003	3,890
4,832	4,735	3,805	3,697
4,580	4,487	3,606	3,504
4,326	4,238	3,406	3,310
4,071	3,988	3,205	3,115
3,814	3,737	3,004	2,919

P20 40K			
GL3	GL5	GL3LU	GL5LU
5,432	5,323	4,278	4,157
5,178	5,073	4,077	3,962
4,922	4,822	3,876	3,766
4,664	4,570	3,673	3,569
4,406	4,317	3,469	3,371
4,146	4,062	3,265	3,172
3,885	3,807	3,059	2,973

P20 50K			
GL3	GL5	GL3LU	GL5LU
5,531	5,420	4,355	4,232
5,272	5,165	4,151	4,034
5,011	4,910	3,946	3,834
4,749	4,653	3,740	3,634
4,486	4,396	3,533	3,433
4,221	4,136	3,324	3,230
3,956	3,876	3,115	3,027

FPDxx Setting	Wattage
Standard	57
FPD95	54
FPD90	51
FPD85	48
FPD80	45
FPD75	43
FPD70	40

P30 27K			
GL3	GL5	GL3LU	GL5LU
7,594	7,441	5,980	5,811
7,247	7,101	5,707	5,545
6,897	6,758	5,431	5,277
6,544	6,412	5,153	5,007
6,045	5,923	4,760	4,625
5,632	5,518	4,435	4,309
5,256	5,150	4,139	4,022

P30 30K			
GL3	GL5	GL3LU	GL5LU
8,620	8,446	6,788	6,596
8,226	8,060	6,478	6,294
7,829	7,671	6,165	5,990
7,428	7,278	5,849	5,684
6,861	6,723	5,403	5,250
6,393	6,264	5,034	4,891
5,966	5,846	4,698	4,565

P30 40K			
GL3	GL5	GL3LU	GL5LU
8,780	8,603	6,913	6,718
8,378	8,209	6,598	6,411
7,974	7,813	6,279	6,101
7,565	7,413	5,957	5,789
6,989	6,848	5,503	5,348
6,511	6,380	5,127	4,982
6,077	5,954	4,785	4,650

P30 50K			
GL3	GL5	GL3LU	GL5LU
8,939	8,759	7,039	6,840
8,531	8,359	6,718	6,528
8,119	7,955	6,393	6,212
7,703	7,548	6,066	5,894
7,116	6,972	5,603	5,445
6,629	6,496	5,220	5,073
6,187	6,063	4,872	4,735

FPDxx Setting	Wattage
Standard	78
FPD95	73
FPD90	69
FPD85	65
FPD80	61

P40 27K			
GL3	GL5	GL3LU	GL5LU
10,123	9,919	7,972	7,746
9,679	9,484	7,622	7,407
9,229	9,043	7,268	7,062
8,772	8,595	6,908	6,712
8,308	8,141	6,543	6,358

P40 30K			
GL3	GL5	GL3LU	GL5LU
11,491	11,259	9,048	8,793
10,987	10,765	8,652	8,407
10,476	10,265	8,249	8,016
9,957	9,756	7,841	7,619
9,431	9,241	7,426	7,216

P40 40K			
GL3	GL5	GL3LU	GL5LU
11,704	11,468	9,216	8,956
11,191	10,965	8,812	8,563
10,670	10,455	8,402	8,164
10,141	9,937	7,986	7,760
9,606	9,412	7,564	7,350

P40 50K			
GL3	GL5	GL3LU	GL5LU
11,917	11,676	9,384	9,118
11,394	11,164	8,972	8,719
10,864	10,645	8,555	8,313
10,326	10,118	8,131	7,901
9,780	9,583	7,702	7,484

FPDxx Setting	Wattage
Standard	95
FPD95	90
FPD90	85
FPD85	80

P50 27K			
GL3	GL5	GL3LU	GL5LU
12,067	11,824	9,502	9,234
11,562	11,328	9,104	8,847
11,045	10,822	8,697	8,452
10,518	10,305	8,282	8,048

P50 30K			
GL3	GL5	GL3LU	GL5LU
13,697	13,421	10,786	10,481
13,123	12,859	10,334	10,042
12,537	12,284	9,872	9,593
11,938	11,698	9,401	9,135

P50 40K			
GL3	GL5	GL3LU	GL5LU
13,951	13,670	10,986	10,675
13,366	13,097	10,525	10,228
12,769	12,512	10,055	9,771
12,160	11,914	9,575	9,304

P50 50K			
GL3	GL5	GL3LU	GL5LU
14,205	13,919	11,186	10,869
13,610	13,335	10,717	10,414
13,002	12,739	10,238	9,949
12,381	12,131	9,749	9,474

© 2020 Acuity Brands Lighting, Inc. All rights reserved. Rev. 06/26/20 Specifications subject to change without notice.

Mark Appropriate Box for Trim Option

Housing

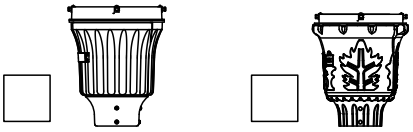

Modern (MS) Leaf (LS)

Cover

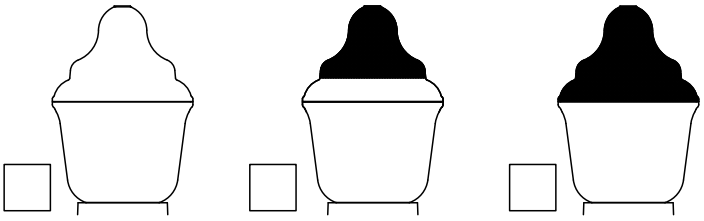

No Cover Mayfield Cover (MC) Full Cover (FC)

Ribs & Bands

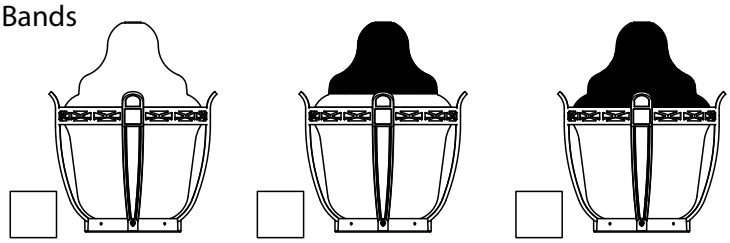

Ribs and Band (RB) Ribs, Band and Mayfield Cover (RB & MC) Ribs, Band and Full Cover (RB & FC)

Finial

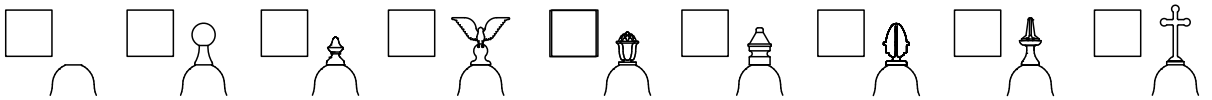

NONE (Blank) BALL (BL) CLEAR (CL) EAGLE (EG) FLOWER (FL) PAWN (PN) CROSS (CR) STANDARD (ST) ROMAN CROSS (RM)

© 2020 Acuity Brands Lighting, Inc. All rights reserved. Rev. 06/26/20 Specifications subject to change without notice.

OPTIONAL COMPONENTS

A0
Manual field adjustable output dimming device

RSBOR6
Motion and photosensor (Black) communicates wirelessly to other nLight AIR devices

DE
Remote Asset Management Control Decorative Node
includes NEMA twistlock photocontrol receptacle

20KV
Safeguard your investment from extreme voltage spikes with our new Extreme 20kV/10kA SPD

NLIGHT RIO2.0
Fixture embedded nLight AIR network interface provides individual fixture control and digital dimming capabilities

© 2020 Acuity Brands Lighting, Inc. All rights reserved. Rev. 06/26/20 Specifications subject to change without notice.

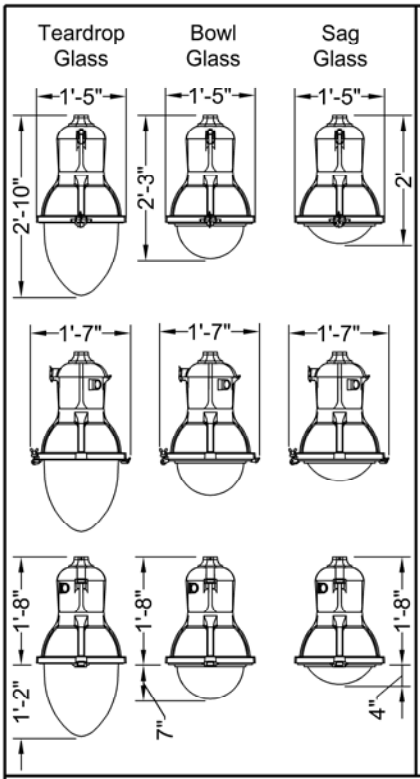

Maximum Effective Projected Area - 2.37 ft²
Maximum Weight - 69 lbs (Up Light Version)
Maximum Weight - 60 lbs (Down Light Version)

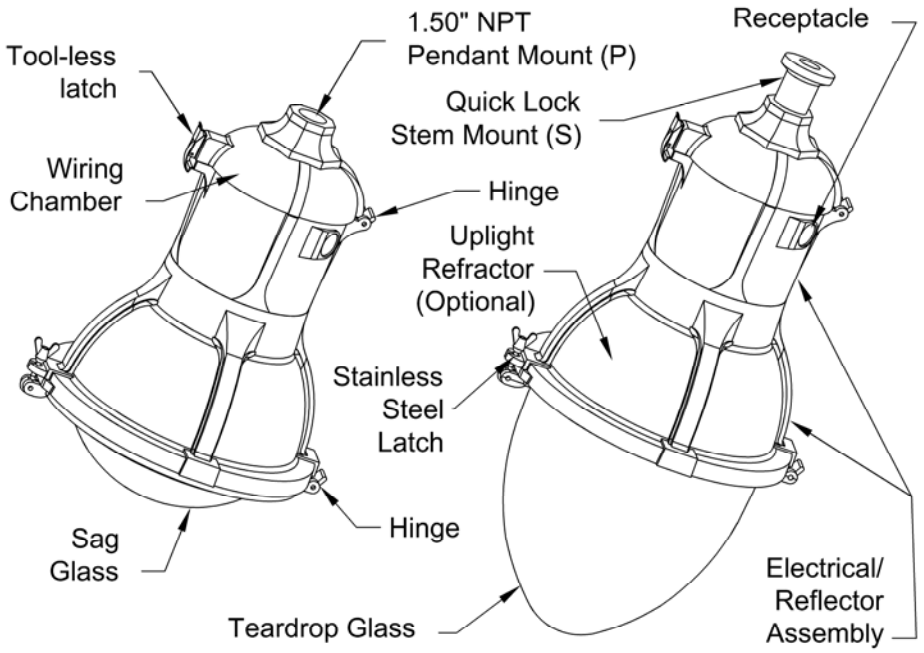

Memphis®
Utility Tear Drop LED 2

DECORATIVE OUTDOOR

HOLOPHANE®
LEADER IN LIGHTING SOLUTIONS
An AcuityBrandsCompany

EXAMPLE: MPL2 P10S 40K AS BK TG 3 S

MPL2 [ ] [ ] [ ] [ ] [ ] [ ] [ ]

ORDERING INFORMATION:

LUMEN / WATTAGE PACKAGE
(SEE PERFORMANCE TABLE FOR DETAILS, Page 2)
P10S = DOWN LIGHT
P10U = DOWN LIGHT AND UP LIGHT
P20S = DOWN LIGHT
P20U = DOWN LIGHT AND UP LIGHT[1]
P30S = DOWN LIGHT
P35S = DOWN LIGHT
P40S = DOWN LIGHT
P50S = DOWN LIGHT
P60S = DOWN LIGHT

COLOR TEMPERATURE
27K = 2700 CCT
30K = 3000 CCT
40K = 4000 CCT
50K = 5000 CCT

VOLTAGE
AS = AUTO-SENSING 120 - 277 V
AH = AUTO-SENSING 347 - 480 V

COLOR
BK = BLACK
DB = DARK BLUE
GR = GRAY
GH = GRAPHITE
GN = GREEN
PP = PRIME PAINT
WH = WHITE
BZ = BRONZE
TDC = TIGER DRYLAC COLOR (RAL***)
CMC = CUSTOM MATCH COLOR
XX = STD FINISH, TBD

DOOR AND GLASS
TG = TEARDROP[2] GLASS & DOOR
BG = BOWL GLASS & DOOR
SG = SAG GLASS & DOOR

OPTIC
3 = TYPE 3 ASYMMETRIC
4 = TYPE 4 ASYMMETRIC (ONLY ON TG DOOR AND GLASS)
5 = TYPE 5 SYMMETRIC

TOP ENTRY
P = 1.5 NPT PENDANT MOUNT
S = QUICK LOCK STEM MOUNT

OPTIONS
AO = ADJUSTABLE OUTPUT DIMMING *(NOT AVAILABLE WITH OPTIONS "P5", "P7", OR ANY OTHER DIMMING OPTION)*[3]
R = NEMA TWISTLOCK PHOTOCONTROL RECEPTACLE (3 PIN)
P5 = NEMA TWISTLOCK PHOTOCONTROL RECEPTACLE (5 PIN)
P7 = NEMA TWISTLOCK PHOTOCONTROL RECEPTACLE (7 PIN)
P3E = PREPARED FOR EXTERNAL 3PIN PHOTOCONTROL RECEPTACLE
P5E = PREPARED FOR EXTERNAL 5PIN PHOTOCONTROL RECEPTACLE
P7E = PREPARED FOR EXTERNAL 7PIN PHOTOCONTROL RECEPTACLE
PSC = SHORTING CAP *(MUST BE USED WITH OPTION "R", "P5", OR "P7")*
PCS = DTL TWISTLOCK PHOTOCONTROL FOR SOLID-STATE LIGHTING 120-277V *(MUST BE USED WITH OPTION "R", "P5", OR "P7")*
PCLL = DTL LONG LIFE TWISTLOCK PHOTOCONTROL FOR SOLID-STATE LIGHTING 120-277V *(MUST BE USED WITH OPTION "R", "P5", OR "P7")*
P34 = DTL TWISTLOCK PHOTOCONTROL 347V *(MUST BE USED WITH OPTION "R", "P5" OR "P7")*
P48 = DTL TWISTLOCK PHOTOCONTROL 480V *(MUST BE USED WITH OPTION "R", "P5" OR "P7")*
FPDXX = FACTORY PROGRAMMED DRIVER *(XX = PERCENTAGE OF LUMENS OR WATTS, SEE PAGE 3)*
DE = ROAM CONCIERGE DIMMING CONTROL *(NOT AVAILABLE WITH VOLTAGE CODE AH, OR ANY OTHER PHOTOCONTROL OR DIMMING OPTION)*
PND = 0-10V PART NIGHT DIMMING *(AS VOLTAGE ONLY, MUST BE USED WITH OPTION "R")*
DS = 30 INCH DIAMETER DEEP SKIRT FOR CUTOFF REQUIREMENT
SS = 30 INCH DIAMETER SHALLOW SKIRT FOR CUTOFF REQUIREMENT

OPTIONS (Cont.)
L1H = 3FT PREWIRED LEADS
L10 = 10FT PREWIRED LEADS
L20 = 20FT PREWIRED LEADS
L25 = 25FT PREWIRED LEADS
L30 = 30FT PREWIRED LEADS
NL2X2 = 2"x2" ANSI WATTAGE LABEL
NL3X3 = 3"x3" ANSI WATTAGE LABEL

ACCESSORIES
LT3HSS90 = HOUSE SIDE SHIELD, 90 DEGREE *(AVAILABLE ON P10S, P10U, P20S, P20U, P30S, AND P35S)*
LT3HSS120 = HOUSE SIDE SHIELD, 120 DEGREE *(AVAILABLE ON P10S, P10U, P20S, P20U, P30S, AND P35S)*
LT3HSS180 = HOUSE SIDE SHIELD, 180 DEGREE *(AVAILABLE ON P10S, P10U, P20S, P20U, P30S, AND P35S)*
LT5HSS90 = HOUSE SIDE SHIELD, 90 DEGREE *(AVAILABLE ON P40S, P50S, AND P60S)*
LT5HSS120 = HOUSE SIDE SHIELD, 120 DEGREE *(AVAILABLE ON P40S, P50S, AND P60S)*
LT5HSS180 = HOUSE SIDE SHIELD, 180 DEGREE *(AVAILABLE ON P40S, P50S, AND P60S)*

NOTES:
1. ONLY AVAILABLE WITH "AS" VOLTAGE
2. ONLY AVAILABLE IN TYPE 3 AND 4
3. FOR AO DATA, REFER TO PAGE 7 OF INSTRUCTION SHEET ON WEBSITE (IM-396)

THIS DRAWING, WHEN APPROVED, SHALL BECOME THE COMPLETE SPECIFICATION FOR THE MATERIAL TO BE FURNISHED BY HOLOPHANE ON THE ORDER NOTED ABOVE. A UNIT OF SIMILAR DESIGN MAY BE SUPPLIED, BUT ONLY AFTER APPROVAL BY THE CUSTOMER IN WRITING. ON POLE ORDERS AN ANCHOR BOLT TEMPLATE PRINT WILL BE SUPPLIED WITH EACH ANCHOR BOLT ORDER TO MATCH THE POLE PROVIDED. THIS PRINT IS THE PROPERTY OF HOLOPHANE AND IS LOANED SUBJECT TO RETURN UPON DEMAND AND UPON EXPRESS CONDITION THAT IT WILL NOT BE USED DIRECTLY OR INDIRECTLY IN ANY WAY DETRIMENTAL TO OUR INTERESTS, AND ONLY IN CONNECTION WITH MATERIAL FURNISHED BY HOLOPHANE.

ORDER #:
TYPE:
DRAWN: RAF
DATE: 10/11/2018
DWG NO: LUM_MPL2

2009 ACUITY BRANDS LIGHTING INC., All Rights Reserved

Performance Data. For skirt and house side shield options, consult factory or website.

LED Package	Glass	Distribution	System Watts	27K (2700K, 70 CRI)					30K (3000K, 70 CRI)					40K (4000K, 70 CRI)					50K (5000K, 70 CRI)				
				Lumens	LPW	B	U	G	Lumens	LPW	B	U	G	Lumens	LPW	B	U	G	Lumens	LPW	B	U	G
P10S	TG 3	T3S	57	6,947	122	1	3	3	7,101	125	1	3	3	7,451	131	1	3	3	7,400	130	1	3	3
	TG 4	T4M	57	6,646	117	3	3	3	6,793	119	3	3	3	7,128	125	3	3	3	7,079	124	3	3	3
	BG 3	T4M	57	6,731	118	2	3	3	6,880	121	2	3	3	7,220	127	2	3	3	7,170	126	2	3	3
	BG 5	T5S	57	7,087	124	3	3	2	7,244	127	3	3	2	7,601	133	3	3	3	7,549	132	3	3	3
	SG 3	T3S	57	6,822	120	1	3	3	6,973	122	1	3	3	7,317	128	1	3	3	7,266	127	1	3	3
	SG 5	T5S	57	7,164	126	3	2	1	7,322	128	3	3	1	7,683	135	3	3	1	7,631	134	3	3	1
P10U	TG 3	T3S	75	8,651	115	1	5	3	8,843	118	1	5	3	9,279	124	1	5	3	9,215	123	1	5	3
	BG 3	T4M	75	8,372	112	2	5	3	8,558	114	2	5	3	8,980	120	2	5	3	8,918	119	2	5	3
	BG 5	T5S	75	8,838	118	3	5	2	9,034	120	3	5	2	9,480	126	3	5	2	9,415	126	3	5	2
	SG 3	T3S	75	8,422	112	1	5	2	8,609	115	1	5	3	9,033	120	1	5	3	8,972	120	1	5	3
	SG 5	T5S	75	8,647	115	2	5	3	8,839	118	2	5	3	9,275	124	2	5	3	9,211	123	2	5	3
P20S	TG 3	T3S	83	9,610	116	2	3	3	9,823	118	2	3	3	10,308	124	2	3	3	10,237	123	2	3	3
	TG 4	T4M	83	9,193	111	3	3	3	9,397	113	4	3	4	9,861	119	4	3	4	9,793	118	4	3	4
	BG 3	T4M	83	9,312	112	2	3	4	9,519	115	2	3	4	9,988	120	2	3	4	9,919	120	2	3	4
	BG 5	T5S	83	9,804	118	3	3	3	10,021	121	3	3	3	10,515	127	4	3	3	10,443	126	4	3	3
	SG 3	T3S	83	9,437	114	1	3	3	9,646	116	2	3	3	10,122	122	2	3	3	10,053	121	2	3	3
	SG 5	T5S	83	9,910	119	3	3	2	10,130	122	3	3	2	10,630	128	3	3	2	10,557	127	3	3	2
P20U	TG 3	T3S	109	11,551	106	2	5	3	11,807	108	2	5	3	12,389	114	2	5	3	12,304	113	2	5	3
	BG 3	T4M	109	11,179	103	2	5	4	11,427	105	2	5	4	11,990	110	2	5	4	11,908	109	2	5	4
	BG 5	T5S	109	11,801	108	3	5	3	12,063	111	3	5	3	12,657	116	3	5	3	12,571	115	3	5	3
	SG 3	T3S	109	11,245	103	2	5	3	11,495	105	2	5	3	12,061	111	2	5	3	11,979	110	2	5	3
	SG 5	T5S	109	11,546	106	2	5	3	11,802	108	2	5	3	12,384	114	2	5	3	12,299	113	2	5	3
P30S	TG 3	T3S	118	12,634	107	2	3	3	12,914	109	2	3	3	13,551	115	2	3	3	13,458	114	2	3	3
	TG 4	T4M	118	12,086	102	3	3	3	12,354	105	4	3	4	12,964	110	4	3	4	12,874	109	4	3	4
	BG 3	T4M	118	12,242	104	2	3	4	12,513	106	2	3	4	13,130	111	3	3	5	13,040	111	3	3	5
	BG 5	T5S	118	12,888	109	4	3	3	13,174	112	4	3	3	13,823	117	4	3	3	13,729	116	4	3	3
	SG 3	T3S	118	12,406	105	2	3	3	12,681	107	2	3	3	13,307	113	2	3	3	13,215	112	2	3	3
	SG 5	T5S	118	13,028	110	3	3	2	13,317	113	3	3	2	13,974	118	4	3	2	13,879	118	4	3	2
P35S	TG 3	T3S	144	14,335	100	2	3	4	14,653	102	2	3	4	15,375	107	2	3	4	15,270	106	2	3	4
	TG 4	T4M	144	13,713	95	4	3	4	14,018	97	4	3	4	14,709	102	4	3	4	14,607	101	4	3	4
	BG 3	T4M	144	13,890	96	3	3	5	14,198	99	3	3	5	14,898	103	3	3	5	14,796	103	3	3	5
	BG 5	T5S	144	14,623	102	4	3	3	14,948	104	4	3	3	15,685	109	4	3	3	15,577	108	4	3	3
	SG 3	T3S	144	14,077	98	2	3	3	14,389	100	2	3	3	15,098	105	2	3	3	14,995	104	2	3	3
	SG 5	T5S	144	14,782	103	4	3	2	15,110	105	4	3	2	15,855	110	4	3	2	15,747	109	4	3	2
P40S	TG 3	T3S	140	15,649	112	3	3	4	15,996	114	3	3	4	16,785	120	3	3	4	16,670	119	3	3	4
	TG 4	T4M	140	14,970	107	4	3	4	15,303	109	4	3	4	16,057	115	4	3	4	15,946	114	4	3	4
	BG 3	T4M	140	14,746	105	3	4	5	15,073	108	3	4	5	15,816	113	3	4	5	15,707	112	3	4	5
	BG 5	T5S	140	15,484	111	4	3	4	15,827	113	4	3	4	16,608	119	4	4	4	16,494	118	4	4	4
	SG 3	T3S	140	14,937	107	2	3	4	15,268	109	2	3	4	16,021	114	2	3	4	15,911	114	2	3	4
	SG 5	T5S	140	16,071	115	4	3	3	16,427	117	4	3	3	17,237	123	4	3	3	17,119	122	4	3	3
P50S	TG 3	T3S	174	18,715	108	3	3	4	19,130	110	3	3	4	20,073	115	3	3	4	19,935	115	3	3	4
	TG 4	T4M	174	17,903	103	4	3	4	18,301	105	4	3	4	19203	110	4	3	4	19,071	110	4	3	4
	BG 3	T4M	174	17,634	101	3	4	5	18,025	104	3	4	5	18,914	109	3	4	5	18,784	108	3	4	5
	BG 5	T5S	174	18,517	106	4	4	4	18,928	109	4	4	4	19,861	114	4	4	4	19,725	113	4	4	4
	SG 3	T3S	174	17,863	103	2	3	4	18,259	105	2	3	4	19,160	110	2	3	5	19,028	109	2	3	4
	SG 5	T5S	174	19,219	110	4	3	3	19,645	113	4	3	3	20,614	118	4	3	3	20,472	118	4	3	3
P60S	TG 3	T3S	242	22,997	95	3	3	5	23,508	97	3	3	5	24,667	102	3	3	5	24,497	101	3	3	5
	TG 4	T4M	242	21,999	91	4	3	4	22,488	93	4	3	4	23,597	98	4	3	4	23,434	97	4	3	4
	BG 3	T4M	242	21,670	90	3	4	5	22,150	92	3	4	5	23,244	96	3	4	5	23,083	95	3	4	5
	BG 5	T5S	242	22,755	94	5	4	5	23,259	96	5	4	5	24,409	101	5	4	5	24,239	100	5	4	5
	SG 3	T3S	242	21,951	91	3	3	5	22,438	93	3	3	5	23,545	97	3	3	5	23,383	97	3	3	5
	SG 5	T5S	242	23,617	98	4	3	3	24,141	100	4	3	3	25,331	105	4	3	3	25,157	104	4	3	3

S = Short M = Medium

Lumen Ambient Temperature Data

Lumen Ambient Temperature (LAT) Multipliers									
°C	P10U	P20U	P10S	P20S	P30S	P35S	P40S	P50S	P60S
0	1.04	1.05	1.04	1.05	1.06	1.07	1.06	1.07	1.09
10	1.03	1.03	1.03	1.03	1.04	1.04	1.04	1.04	1.05
20	1.01	1.01	1.01	1.01	1.01	1.01	1.01	1.01	1.02
25	1.00	1.00	1.00	1.00	1.00	1.00	1.00	1.00	1.00
30	0.99	0.99	0.99	0.99	0.99	0.99	0.99	0.99	0.98
40	0.97	0.97	0.97	0.97	0.96	0.95	0.96	0.95	0.94

Lumen Maintenance Data

Lumen Maintenance (same for all LED packages)				
Hours	0	25,000	50,000	100,000
Factor	1	0.9	0.84	0.75

ORDER #:
TYPE:
DRAWN: RAF
DATE: 10/11/2018
DWG NO: LUM_MPL2

THIS DRAWING, WHEN APPROVED, SHALL BECOME THE COMPLETE SPECIFICATION FOR THE MATERIAL TO BE FURNISHED BY HOLOPHANE ON THE ORDER NOTED ABOVE. A UNIT OF SIMILAR DESIGN MAY BE SUPPLIED, BUT ONLY AFTER APPROVAL BY THE CUSTOMER IN WRITING. ON POLE ORDERS AN ANCHOR BOLT TEMPLATE PRINT WILL BE SUPPLIED WITH EACH ANCHOR BOLT ORDER TO MATCH THE POLE PROVIDED. THIS PRINT IS THE PROPERTY OF HOLOPHANE AND IS LOANED SUBJECT TO RETURN UPON DEMAND AND UPON EXPRESS CONDITION THAT IT WILL NOT BE USED DIRECTLY OR INDIRECTLY IN ANY WAY DETRIMENTAL TO OUR INTERESTS, AND ONLY IN CONNECTION WITH MATERIAL FURNISHED BY HOLOPHANE.

HOLOPHANE®
LEADER IN LIGHTING SOLUTIONS
An AcuityBrandsCompany

DECORATIVE OUTDOOR

Memphis®
Utility Tear Drop LED 2

2009 ACUITY BRANDS LIGHTING INC., All Rights Reserved

FPDXX Data Options

FPDxx setting	P10S 27K						P10S 30K						P10S 40K						P10S 50K					
	TG 3	BG 3	BG 5	SG 3	SG 5	Watts	TG 3	BG 3	BG 5	SG 3	SG 5	Watts	TG 3	BG 3	BG 5	SG 3	SG 5	Watts	TG 3	BG 3	BG 5	SG 3	SG 5	Watts
Standard	6,947	6,731	7,087	6,822	7,164	57	7,101	6,880	7,244	6,973	7,322	57	7,451	7,220	7,601	7,317	7,683	57	7,400	7,170	7,549	7,266	7,631	57
FPD95	6,638	6,432	6,772	6,519	6,846	54	6,785	6,574	6,922	6,663	6,997	54	7,120	6,899	7,263	6,992	7,342	54	7,071	6,851	7,213	6,943	7,292	54
FPD90	6,326	6,129	6,453	6,212	6,523	51	6,466	6,265	6,596	6,349	6,667	51	6,785	6,574	6,921	6,663	6,996	51	6,738	6,529	6,874	6,616	6,948	51
FPD85	6,009	5,822	6,130	5,901	6,197	48	6,142	5,951	6,266	6,032	6,334	48	6,445	6,245	6,575	6,329	6,646	48	6,401	6,202	6,530	6,285	6,601	48
FPD80	5,689	5,512	5,804	5,587	5,867	45	5,815	5,634	5,932	5,710	5,996	45	6,102	5,913	6,225	5,992	6,292	45	6,060	5,872	6,182	5,950	6,249	45
FPD75	5,365	5,199	5,474	5,269	5,533	43	5,484	5,314	5,595	5,386	5,655	43	5,755	5,576	5,871	5,651	5,934	43	5,715	5,538	5,830	5,612	5,894	43

FPDxx setting	P10U 27K						P10U 30K						P10U 40K						P10U 50K					
	TG 3	BG 3	BG 5	SG 3	SG 5	Watts	TG 3	BG 3	BG 5	SG 3	SG 5	Watts	TG 3	BG 3	BG 5	SG 3	SG 5	Watts	TG 3	BG 3	BG 5	SG 3	SG 5	Watts
Standard	8,651	8,372	8,838	8,422	8,647	75	8,843	8,558	9,034	8,609	8,839	75	9,279	8,980	9,480	9,033	9,275	75	9,215	8,918	9,415	8,972	9,211	75
FPD95	8,264	7,998	8,443	8,046	8,261	72	8,448	8,176	8,630	8,224	8,444	72	8,864	8,579	9,056	8,629	8,861	72	8,803	8,519	8,994	8,571	8,799	72
FPD90	7,873	7,619	8,044	7,665	7,870	68	8,048	7,789	8,222	7,835	8,044	68	8,445	8,173	8,628	8,221	8,441	68	8,387	8,116	8,569	8,166	8,383	68
FPD85	7,478	7,237	7,639	7,280	7,474	64	7,644	7,397	7,809	7,442	7,640	64	8,021	7,762	8,194	7,808	8,017	64	7,965	7,709	8,138	7,755	7,962	64
FPD80	7,078	6,850	7,231	6,891	7,075	61	7,235	7,002	7,391	7,044	7,232	61	7,592	7,347	7,756	7,390	7,588	61	7,539	7,296	7,703	7,341	7,536	61
FPD75	6,674	6,458	6,818	6,497	6,671	57	6,822	6,602	6,969	6,641	6,819	57	7,158	6,928	7,313	6,968	7,155	57	7,109	6,880	7,263	6,921	7,106	57

FPDxx setting	P20S 27K						P20S 30K						P20S 40K						P20S 50K					
	TG 3	BG 3	BG 5	SG 3	SG 5	Watts	TG 3	BG 3	BG 5	SG 3	SG 5	Watts	TG 3	BG 3	BG 5	SG 3	SG 5	Watts	TG 3	BG 3	BG 5	SG 3	SG 5	Watts
Standard	9,610	9,312	9,804	9,437	9,910	83	9,823	9,519	10,021	9,646	10,130	83	10,308	9,988	10,515	10,122	10,630	83	10,237	9,919	10,443	10,053	10,557	83
FPD95	9,212	8,926	9,398	9,046	9,499	79	9,416	9,125	9,606	9,246	9,710	79	9,881	9,574	10,079	9,703	10,190	79	9,813	9,508	10,010	9,637	10,120	79
FPD90	8,805	8,532	8,982	8,646	9,080	75	9,000	8,721	9,181	8,838	9,281	75	9,444	9,151	9,634	9,274	9,739	75	9,379	9,088	9,568	9,211	9,672	75
FPD85	8,389	8,129	8,558	8,238	8,651	71	8,575	8,309	8,747	8,420	8,843	71	8,998	8,719	9,179	8,836	9,279	71	8,936	8,658	9,116	8,775	9,215	71
FPD80	7,964	7,717	8,125	7,820	8,212	66	8,140	7,888	8,304	7,994	8,395	66	8,542	8,277	8,714	8,388	8,809	66	8,483	8,220	8,654	8,331	8,749	66
FPD75	7,530	7,297	7,682	7,395	7,765	62	7,697	7,459	7,852	7,559	7,938	62	8,077	7,827	8,240	7,932	8,330	62	8,022	7,773	8,183	7,878	8,272	62

FPDxx setting	P20U 27K						P20U 30K						P20U 40K						P20U 50K					
	TG 3	BG 3	BG 5	SG 3	SG 5	Watts	TG 3	BG 3	BG 5	SG 3	SG 5	Watts	TG 3	BG 3	BG 5	SG 3	SG 5	Watts	TG 3	BG 3	BG 5	SG 3	SG 5	Watts
Standard	11,551	11,179	11,801	11,245	11,546	109	11,807	11,427	12,063	11,495	11,802	109	12,389	11,990	12,657	12,061	12,384	109	12,304	11,908	12,571	11,979	12,299	109
FPD95	11,066	10,710	11,306	10,773	11,061	104	11,311	10,947	11,557	11,013	11,307	104	11,869	11,487	12,126	11,555	11,864	104	11,788	11,408	12,043	11,476	11,783	104
FPD90	10,571	10,231	10,800	10,291	10,567	98	10,806	10,458	11,040	10,520	10,801	98	11,338	10,973	11,584	11,038	11,334	98	11,260	10,898	11,505	10,963	11,256	98
FPD85	10,067	9,742	10,284	9,800	10,062	93	10,290	9,958	10,513	10,018	10,285	93	10,797	10,449	11,030	10,511	10,792	93	10,723	10,378	10,955	10,440	10,718	93
FPD80	9,552	9,244	9,759	9,299	9,548	88	9,764	9,449	9,975	9,506	9,760	88	10,245	9,915	10,467	9,974	10,241	88	10,175	9,847	10,395	9,906	10,171	88
FPD75	9,028	8,737	9,223	8,789	9,024	82	9,228	8,931	9,428	8,984	9,224	82	9,683	9,371	9,892	9,426	9,679	82	9,616	9,307	9,825	9,362	9,612	82

FPDxx setting	P30S 27K						P30S 30K						P30S 40K						P30S 50K					
	TG 3	BG 3	BG 5	SG 3	SG 5	Watts	TG 3	BG 3	BG 5	SG 3	SG 5	Watts	TG 3	BG 3	BG 5	SG 3	SG 5	Watts	TG 3	BG 3	BG 5	SG 3	SG 5	Watts
Standard	12,634	12,242	12,888	12,406	13,028	118	12,914	12,513	13,174	12,681	13,317	118	13,551	13,130	13,823	13,307	13,974	118	13,458	13,040	13,729	13,215	13,879	118
FPD95	12,177	11,799	12,422	11,957	12,556	112	12,447	12,060	12,697	12,222	12,835	112	13,061	12,655	13,323	12,825	13,468	112	12,971	12,568	13,232	12,737	13,377	112
FPD90	11,699	11,336	11,934	11,488	12,064	105	11,958	11,587	12,199	11,742	12,331	105	12,548	12,158	12,800	12,322	12,940	105	12,462	12,075	12,713	12,237	12,852	105
FPD85	11,201	10,854	11,426	10,999	11,551	99	11,449	11,094	11,680	11,243	11,807	99	12,014	11,641	12,255	11,798	12,389	99	11,932	11,561	12,172	11,716	12,305	99
FPD80	10,684	10,352	10,899	10,491	11,017	93	10,921	10,582	11,141	10,724	11,261	93	11,459	11,103	11,689	11,253	11,817	93	11,381	11,027	11,610	11,175	11,737	93
FPD75	10,147	9,833	10,351	9,964	10,464	87	10,372	10,050	10,581	10,185	10,696	87	10,884	10,546	11,102	10,688	11,224	87	10,809	10,474	11,027	10,614	11,147	87

FPDxx setting	P35S 27K						P35S 30K						P35S 40K						P35S 50K					
	TG 3	BG 3	BG 5	SG 3	SG 5	Watts	TG 3	BG 3	BG 5	SG 3	SG 5	Watts	TG 3	BG 3	BG 5	SG 3	SG 5	Watts	TG 3	BG 3	BG 5	SG 3	SG 5	Watts
Standard	14,335	13,890	14,623	14,077	14,782	144	14,653	14,198	14,948	14,389	15,110	144	15,375	14,898	15,685	15,098	15,855	144	15,270	14,796	15,577	14,995	15,747	144
FPD95	13,886	13,455	14,165	13,636	14,319	136	14,194	13,753	14,480	13,938	14,637	136	14,893	14,431	15,194	14,625	15,358	136	14,792	14,333	15,089	14,525	15,254	136
FPD90	13,405	12,989	13,674	13,163	13,823	129	13,702	13,277	13,978	13,455	14,129	129	14,377	13,931	14,667	14,118	14,826	129	14,279	13,836	14,566	14,022	14,725	129
FPD85	12,892	12,492	13,151	12,660	13,294	121	13,178	12,769	13,443	12,940	13,589	121	13,827	13,398	14,106	13,578	14,259	121	13,733	13,306	14,009	13,485	14,162	121

FPDxx setting	P40S 27K						P40S 30K						P40S 40K						P40S 50K					
	TG 3	BG 3	BG 5	SG 3	SG 5	Watts	TG 3	BG 3	BG 5	SG 3	SG 5	Watts	TG 3	BG 3	BG 5	SG 3	SG 5	Watts	TG 3	BG 3	BG 5	SG 3	SG 5	Watts
Standard	15,649	14,746	15,484	14,937	16,071	140	15,996	15,073	15,827	15,268	16,427	140	16,785	15,816	16,608	16,021	17,237	140	16,670	15,707	16,494	15,911	17,119	140
FPD95	15,046	14,178	14,887	14,361	15,452	133	15,380	14,492	15,217	14,680	15,794	133	16,138	15,207	15,968	15,404	16,573	133	16,028	15,102	15,858	15,298	16,459	133
FPD90	14,422	13,590	14,270	13,766	14,811	125	14,742	13,891	14,586	14,071	15,139	125	15,469	14,576	15,306	14,765	15,886	125	15,363	14,476	15,201	14,664	15,777	125
FPD85	13,871	13,071	13,725	13,240	14,246	119	14,179	13,361	14,029	13,534	14,561	119	14,878	14,019	14,722	14,201	15,279	119	14,776	13,923	14,620	14,104	15,174	119

FPDxx setting	P50S 27K						P50S 30K						P50S 40K						P50S 50K					
	TG 3	BG 3	BG 5	SG 3	SG 5	Watts	TG 3	BG 3	BG 5	SG 3	SG 5	Watts	TG 3	BG 3	BG 5	SG 3	SG 5	Watts	TG 3	BG 3	BG 5	SG 3	SG 5	Watts
Standard	18,715	17,634	18,517	17,863	19,219	174	19,130	18,025	18,928	18,259	19,645	174	20,073	18,914	19,861	19,160	20,614	174	19,935	18,784	19,725	19,028	20,472	174
FPD95	18,100	17,055	17,909	17,276	18,588	165	18,501	17,433	18,306	17,659	19,000	165	19,413	18,293	19,208	18,530	19,937	165	19,280	18,167	19,077	18,403	19,799	165
FPD90	17,433	16,426	17,248	16,639	17,902	155	17,819	16,790	17,631	17,008	18,299	155	18,698	17,618	18,500	17,847	19,202	155	18,569	17,497	18,373	17,724	19,069	155
FPD85	16,743	15,776	16,566	15,981	17,194	147	17,115	16,126	16,934	16,336	17,576	147	17,958	16,922	17,769	17,142	18,442	147	17,835	16,805	17,647	17,024	18,315	147
FPD80	16,002	15,078	15,833	15,274	16,433	138	16,357	15,412	16,184	15,612	16,797	138	17,163	16,172	16,982	16,383	17,626	138	17,045	16,061	16,866	16,270	17,504	138

FPDxx setting	P60S 27K						P60S 30K						P60S 40K						P60S 50K					
	TG 3	BG 3	BG 5	SG 3	SG 5	Watts	TG 3	BG 3	BG 5	SG 3	SG 5	Watts	TG 3	BG 3	BG 5	SG 3	SG 5	Watts	TG 3	BG 3	BG 5	SG 3	SG 5	Watts
Standard	22,997	21,670	22,755	21,951	23,617	242	23,508	22,150	23,259	22,438	24,141	242	24,667	23,244	24,409	23,545	25,331	242	24,497	23,083	24,239	23,383	25,157	242
FPD95	22,498	21,200	22,261	21,475	23,105	228	22,998	21,669	22,754	21,951	23,617	228	24,132	22,740	23,879	23,034	24,781	228	23,966	22,582	23,713	22,876	24,611	228
FPD90	21,917	20,652	21,686	20,920	22,508	215	22,404	21,110	22,166	21,384	23,007	215	23,508	22,152	23,262	22,439	24,141	215	23,346	21,999	23,100	22,285	23,975	215
FPD85	21,255	20,029	21,032	20,289	21,828	203	21,728	20,472	21,497	20,739	22,313	203	22,799	21,484	22,560	21,762	23,413	203	22,642	21,335	22,403	21,612	23,252	203
FPD80	20,516	19,333	20,301	19,583	21,070	189	20,972	19,761	20,750	20,018	21,537	189	22,006	20,737	21,776	21,005	22,599	189	21,855	20,593	21,624	20,861	22,443	189
FPD75	19,703	18,566	19,495	18,806	20,234	176	20,140	18,977	19,927	19,224	20,683	176	21,133	19,914	20,912	20,172	21,702	176	20,988	19,776	20,767	20,033	21,553	176

ORDER #:
TYPE:
DRAWN: RAF
DATE: 10/11/2018
DWG NO: LUM_MPL2

THIS DRAWING, WHEN APPROVED, SHALL BECOME THE COMPLETE SPECIFICATION FOR THE MATERIAL TO BE FURNISHED BY HOLOPHANE ON THE ORDER NOTED ABOVE. A UNIT OF SIMILAR DESIGN MAY BE SUPPLIED, BUT ONLY AFTER APPROVAL BY THE CUSTOMER IN WRITING. ON POLE ORDERS AN ANCHOR BOLT TEMPLATE PRINT WILL BE SUPPLIED WITH EACH ANCHOR BOLT ORDER TO MATCH THE POLE PROVIDED. THIS PRINT IS THE PROPERTY OF HOLOPHANE AND IS LOANED SUBJECT TO RETURN UPON DEMAND AND UPON EXPRESS CONDITION THAT IT WILL NOT BE USED DIRECTLY OR INDIRECTLY IN ANY WAY DETRIMENTAL TO OUR INTERESTS, AND ONLY IN CONNECTION WITH MATERIAL FURNISHED BY HOLOPHANE.

HOLOPHANE®
LEADER IN LIGHTING SOLUTIONS
An AcuityBrandsCompany

DECORATIVE OUTDOOR

Memphis®
Utility Tear Drop LED 2

2009 ACUITY BRANDS LIGHTING INC., All Rights Reserved

Mark Appropriate Box for Trim Option

	Standard	Shallow Skirt	Deep Skirt
Teardrop Glass (Asymmetric)	☐ 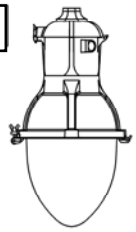	☐ 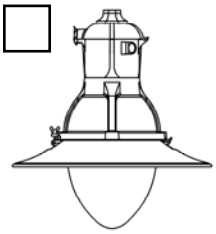	☐ 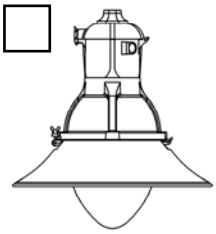
Bowl Glass (Asymmetric) (Symmetric)	☐ 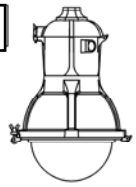	☐ 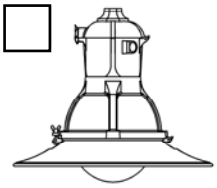	☐ 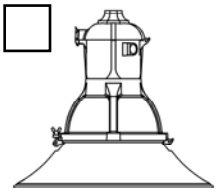
Sag Glass (Asymmetric) (Symmetric)	☐ 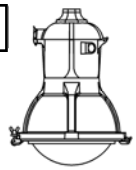	☐ 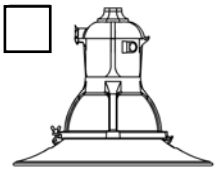	☐ 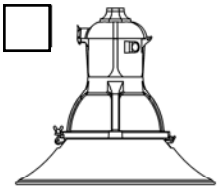

Skirt Dimensions

(For Teardrop, Bowl, and Sag glass)

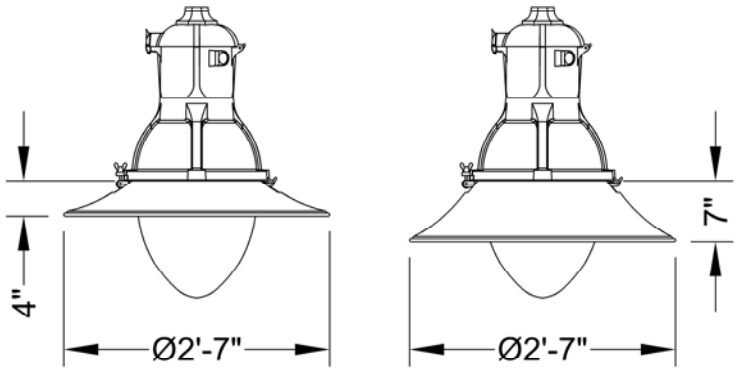

Specifications

DESCRIPTION

The Memphis luminaire is styled to replicate the “teardrop” luminaires that lighted boulevards in the first half of the 1900s. Designed for light control and ease of installation and maintenance, the Memphis has a precision optical system for true street lighting performance.

WIRING CHAMBER

The wiring chamber has either a 1.50 inch NPT with a stainless steel set screw or a welded stem. The stem (Quick Lock Stem Mounting option) aids installation speed. A (3) station terminal block that accepts #14 through #2 wires and has a quick disconnect harness with removable electrical module is provided.

ELECTRICAL / REFLECTOR ASSEMBLY

The electrical / reflector assembly hinges down from the wiring chamber for ease in wiring and to facilitate the removal of the electrical module. The assembly is secured in place by a stainless steel latch. The unitized electrical module consists of the electronic driver and components mounted to an aluminum plate that is easily removed by loosening two screws in the base of the housing. The disconnect plug connects the ballast to the terminal block in the wiring chamber.

REFRACTOR / DOOR ASSEMBLY

The cast aluminum door supports a teardrop, bowl or sag shaped, thermal resistant borosilicate glass refractor that controls the light to provide an I.E.S. asymmetric (teardrop, bowl and sag glass) and symmetric (bowl and sag glass) distribution. I.E.S. asymmetric cut off distribution is available on the bowl glass with the decorative deep skirt option and the sag glass with either the decorative shallow or deep skirt option. The refractor assembly and decorative skirt (when applicable) assembly hinges from the electrical / reflector assembly and is latched by a tamper-resistant, color matched bracket and with nut assembly.

DRIVER

LED programmable dimmable driver located in the upper electrical housing.

FINISH / MATERIAL

The luminaire is finished with polyester powder paint to insure maximum durability. All castings utilize low copper aluminum for maximum corrosion resistance and all exposed hardware is stainless steel.

CERTIFICATION

CSA listing suitable for wet location up to 40°C. Consult factory for details.

Memphis®

Utility Tear Drop LED 2

DECORATIVE OUTDOOR

HOLOPHANE®
LEADER IN LIGHTING SOLUTIONS
An AcuityBrandsCompany

THIS DRAWING, WHEN APPROVED, SHALL BECOME THE COMPLETE SPECIFICATION FOR THE MATERIAL TO BE FURNISHED BY HOLOPHANE ON THE ORDER NOTED ABOVE. A UNIT OF SIMILAR DESIGN MAY BE SUPPLIED, BUT ONLY AFTER APPROVAL BY THE CUSTOMER IN WRITING. ON POLE ORDERS AN ANCHOR BOLT TEMPLATE PRINT WILL BE SUPPLIED WITH EACH ANCHOR BOLT ORDER TO MATCH THE POLE PROVIDED. THIS PRINT IS THE PROPERTY OF HOLOPHANE AND IS LOANED SUBJECT TO RETURN UPON DEMAND AND UPON EXPRESS CONDITION THAT IT WILL NOT BE USED DIRECTLY OR INDIRECTLY IN ANY WAY DETRIMENTAL TO OUR INTERESTS, AND ONLY IN CONNECTION WITH MATERIAL FURNISHED BY HOLOPHANE.

ORDER #:	
TYPE:	
DRAWN:	RAF
DATE:	10/11/2018
DWG NO:	LUM_MPL2

©2009 ACUITY BRANDS LIGHTING INC., All Rights Reserved

LUMEC
by signify

Urban

Optima

OT10–OT20
Post Top

Lumec **Optima** LED post top and pedant luminaires are the perfect choice for urban projects such as streets, walkways and public spaces that compel that extra little bit of detail. This timeless luminaire is made from top-quality materials, is easy to maintain, and adds a distinctive decorative aspect to any contemporary environment. Paired with the latest LED technology, its IP66 rating, multiple lumen outputs, various luminaire style options and energy-saving control options are well suited to meet wide range of project requirements.

Project:
Location:
Cat.No:
Type:
Lamps: Qty:
Notes:

Ordering guide

example: OT10-72W32LED3K-G2-ACDR-LE3A-120-DMG-RC-GN8TX

Series	LED module	Gen.	Globe	Optical system	Voltage	Driver options	Luminaire options		Poles/Brackets	Finish
		G2								
OT10 **OT20**	**3000K** **35W32LED3K**[1] **55W32LED3K**[1] **55W48LED3K** **72W32LED3K** **80W48LED3K** **4000K** **35W32LED4K**[1] **55W32LED4K**[1] **55W48LED4K** **72W32LED4K** **80W48LED4K**	**G2** Gen 2	**ACDR** Acrylic Globe	**LE2A**[2] Type II (ASYM) w/globe **LE3A**[2] Type III (ASYM) w/globe **LE4A**[2] Type IV (ASYM) w/globe **LE2F** Type II (ASYM) w/flat glass lens **LE2S** Type II (ASYM) w/sag glass lens **LE3F** Type III (ASYM) w/flat glass lens **LE3S** Type III (ASYM) w/sag glass lens **LE4F** Type IV (ASYM) w/flat glass lens **LE4S** Type IV (ASYM) w/sag glass lens **LE5F**[3] Type V (SYMM) w/flat glass lens **LE5S**[3] Type V (SYMM) w/sag glass lens	**120** **208** **240** **277** **347** **480**	**AST**[1] Pre-set driver for progressive start-up **CDMGE25**[1] 8 hrs. 25% reduction **CDMGE50**[1] 8 hrs. 50% reduction **CDMGE75**[1] 8 hrs. 75% reduction **CDMGM25**[1] 6 hrs. 25% reduction **CDMGM50**[1] 6 hrs. 50% reduction **CDMGM75**[1] 6 hrs. 75% reduction **CDMGS25**[1] 4 hrs. 25% reduction **CDMGS50**[1] 4 hrs. 50% reduction **CDMGS75**[1] 4 hrs. 75% reduction **CLO**[1] Pre-set driver to manage lumen depreciation **DMG** 0-10V **OTL**[1] Pre-set driver to signal end of life of the lamp **SRD**[1] Sensor ready driver, standard configuration **SRD1**[1] Sensor ready driver, alternate configuration	**HS** House side shield **PH8**[5] Photoelectric cell **PH9**[5] Shorting cap **PHXL**[5] Photoelectric cell, extended life **RC**[4,5] Receptacle 3-pins **RCD7**[6] Receptacle 7-pin **SP2** (optional) 20kV/20kA surge protector **TN2.875C** 2-7/8" dia. tenon adaptor **TN3** 3" dia. tenon adaptor **TN3.5** 3-1/2" dia. tenon adaptor	**Decorative items** **DA** Decorative arches **DC** Decorative cap **DF10**[5] Decorative Coupola **DF20**[5] Decorative Coupola **FN1**[5] Decorative finial **FN2**[5] Decorative finial **FN3**[5] Decorative finial **FN5**[5] Decorative finial **FN6**[5] Decorative finial **FN8**[5] Decorative finial **FN9**[5] Decorative finial **FN10**[5] Decorative finial **FNC**[5] Decorative finial painted copper	Consult with signify.com/outdoorluminaires for details and the complete line of Signify poles and brackets.	**Textured** **BE2TX** Midnight Blue **BE6TX** Ocean Blue **BE8TX** Royal Blue **BG2TX** Sandstone **BKTX** Black **BRTX** Bronze **GN4TX** Blue Green **GN6TX** Forest Green **GN8TX** Dark Forest Green **GNTX** Green **GY3TX** Medium Grey **RD2TX** Burgundy **RD4TX** Scarlet **WHTX** White **Other** **GR** Gray Sandtex **NP** Natural Aluminum **TG** Hammertone Gold

1. Not available 347-480 volt.
2. Globe Material **ACDR** is required with this optical system.
3. Not available with **HS** option.
4. Use of photoelectric cell or shorting cap is required to ensure proper illumination.
5. Not available with **RCD7**.
6. The **RCD7** is located on top of the roof in place of the finial for use with a control node.

Note: If **DALI** or 5 or 7 pin receptacle is required contact factory.

OT10-OT20 Optima LED Post Top

Urban Luminaire

Dimensions

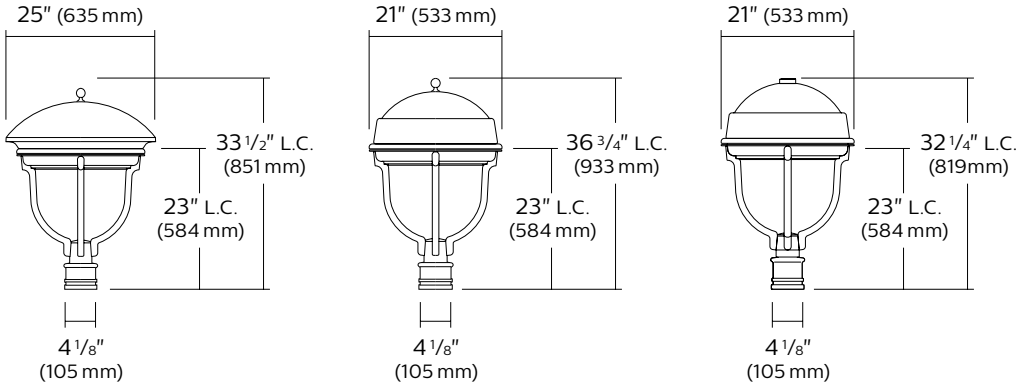

OT10-C

EPA: 1.74 sq.ft.
Weight: 40.5 lbs. (18 kg)

OT20-C

EPA: 1.42 sq.ft.
Weight: 40.5 lbs. (18 kg)

OT20-RCD7

EPA: 1.42 sq.ft.
Weight: 40.5 lbs. (18 kg)

LED Wattage and Lumen Values: for OT10-20 with Flat lens

Ordering Code: Flat lens (3000K)	Total LEDs	LED current (mA)	Average System Wattage[1] (W)	LE2F			LE3F			LE4F			LE5F		
				Lumen Output[2]	Efficacy (LPW)	BUG Rating	Lumen Output[2]	Efficacy (LPW)	BUG Rating	Lumen Output[2]	Efficacy (LPW)	BUG Rating	Lumen Output[2]	Efficacy (LPW)	BUG Rating
OTx-35W32LED3K-G2	32	350	37	3128	85	B1-U0-G1	3114	84	B1-U0-G1	3082	83	B1-U0-G1	3155	85	B2-U0-G1
OTx-55W32LED3K-G2	32	530	54	4487	83	B1-U0-G1	4467	83	B1-U0-G1	4421	82	B1-U0-G1	4525	84	B3-U0-G1
OTx-72W32LED3K-G2	32	700	73	5659	78	B1-U0-G1	5633	77	B1-U0-G1	5575	76	B1-U0-G1	5707	78	B3-U0-G1
OTx-55W48LED3K-G2	48	350	54	4692	87	B1-U0-G1	4671	87	B1-U0-G1	4623	86	B1-U0-G1	4733	88	B3-U0-G1
OTx-80W48LED3K-G2	48	530	80	6730	84	B1-U0-G1	6700	84	B1-U0-G1	6631	83	B1-U0-G2	6788	85	B3-U0-G1

Ordering Code: Flat lens (4000K)	Total LEDs	LED current (mA)	Average System Wattage[1] (W)	LE2F			LE3F			LE4F			LE5F		
				Lumen Output[2]	Efficacy (LPW)	BUG Rating	Lumen Output[2]	Efficacy (LPW)	BUG Rating	Lumen Output[2]	Efficacy (LPW)	BUG Rating	Lumen Output[2]	Efficacy (LPW)	BUG Rating
OTx-35W32LED4K-G2	32	350	37	3503	95	B1-U0-G1	3488	94	B1-U0-G1	3452	93	B1-U0-G1	3534	96	B2-U0-G1
OTx-55W32LED4K-G2	32	530	54	5025	93	B1-U0-G1	5003	93	B1-U0-G1	4951	92	B1-U0-G1	5069	94	B3-U0-G1
OTx-72W32LED4K-G2	32	700	73	6338	87	B1-U0-G1	6309	86	B1-U0-G1	6244	86	B1-U0-G2	6392	88	B3-U0-G1
OTx-55W48LED4K-G2	48	350	54	5255	97	B1-U0-G1	5232	97	B1-U0-G1	5178	96	B1-U0-G1	5300	98	B3-U0-G1
OTx-80W48LED4K-G2	48	530	80	7538	94	B2-U0-G1	7504	94	B1-U0-G2	7427	93	B1-U0-G2	7603	95	B3-U0-G2

Actual performance may vary due to installation variables including optics, mounting/ceiling height, dirt depreciation, light loss factor, etc.; highly recommended to confirm performance with a layout - contact Applications at signify.com/outdoorluminaires.
Note: Some data may be scaled based on tests of similar. But not identical luminaires.

OT10-OT20 Optima LED Post Top

Urban Luminaire

LED Wattage and Lumen Values: for OT10-20 with Sag lens

Ordering Code: Sag lens (3000K)	Total LEDs	LED current (mA)	Average System Wattage[1] (W)	LE2S			LE3S			LE4S			LE5S		
				Lumen Output[2]	Efficacy (LPW)	BUG Rating	Lumen Output[2]	Efficacy (LPW)	BUG Rating	Lumen Output[2]	Efficacy (LPW)	BUG Rating	Lumen Output[2]	Efficacy (LPW)	BUG Rating
OTx-35W32LED3K-G2	32	350	37	3233	87	B1-U0-G1	3153	85	B1-U0-G1	3130	85	B1-U0-G1	3259	88	B2-U0-G1
OTx-55W32LED3K-G2	32	530	54	4637	86	B1-U0-G1	4523	84	B1-U0-G1	4490	83	B1-U0-G1	4675	87	B3-U0-G1
OTx-72W32LED3K-G2	32	700	73	5849	80	B1-U0-G1	5704	78	B1-U0-G1	5662	78	B1-U0-G2	5896	81	B3-U0-G1
OTx-55W48LED3K-G2	48	350	54	4850	90	B1-U0-G1	4730	88	B1-U0-G1	4695	87	B1-U0-G1	4889	91	B3-U0-G1
OTx-80W48LED3K-G2	48	530	80	6956	87	B1-U0-G1	6784	85	B1-U0-G2	6734	84	B1-U0-G2	7012	88	B3-U0-G2

Ordering Code: Sag lens (4000K)	Total LEDs	LED current (mA)	Average System Wattage[1] (W)	LE2S			LE3S			LE4S			LE5S		
				Lumen Output[2]	Efficacy (LPW)	BUG Rating	Lumen Output[2]	Efficacy (LPW)	BUG Rating	Lumen Output[2]	Efficacy (LPW)	BUG Rating	Lumen Output[2]	Efficacy (LPW)	BUG Rating
OTx-35W32LED4K-G2	32	350	37	3621	98	B1-U0-G1	3531	95	B1-U0-G1	3506	95	B1-U0-G1	3650	99	B3-U0-G1
OTx-55W32LED4K-G2	32	530	54	5194	96	B1-U0-G1	5065	94	B1-U0-G1	5028	93	B1-U0-G2	5236	97	B3-U0-G1
OTx-72W32LED4K-G2	32	700	73	6550	90	B1-U0-G1	6388	88	B1-U0-G2	6342	87	B1-U0-G2	6603	90	B3-U0-G2
OTx-55W48LED4K-G2	48	350	54	5431	101	B1-U0-G1	5297	98	B1-U0-G1	5258	97	B1-U0-G2	5475	101	B3-U0-G1
OTx-80W48LED4K-G2	48	530	80	7791	97	B2-U0-G2	7598	95	B1-U0-G2	7543	94	B1-U0-G2	7853	98	B3-U0-G2

Actual performance may vary due to installation variables including optics, mounting/ceiling height, dirt depreciation, light loss factor, etc.; highly recommended to confirm performance with a layout - contact Applications at signify.com/outdoorluminaires.
Note: Some data may be scaled based on tests of similar. But not identical luminaires.

LED Wattage and Lumen Values: for OT10-20 with Globe

Ordering Code: Globe (3000K)	Total LEDs	LED current (mA)	Average System Wattage[1] (W)	LE2A			LE3A			LE4A		
				Lumen Output[2]	Efficacy (LPW)	BUG Rating	Lumen Output[2]	Efficacy (LPW)	BUG Rating	Lumen Output[2]	Efficacy (LPW)	BUG Rating
OTx-35W32LED3K-G2	32	350	37	2759	75	B1-U3-G1	2601	70	B1-U2-G1	2794	76	B1-U2-G1
OTx-55W32LED3K-G2	32	530	54	3958	73	B1-U3-G1	3730	69	B1-U3-G1	4008	74	B1-U3-G1
OTx-72W32LED3K-G2	32	700	73	4992	68	B1-U3-G1	4705	64	B1-U3-G1	5055	69	B1-U3-G2
OTx-55W48LED3K-G2	48	350	54	4139	77	B1-U3-G1	3901	72	B1-U3-G1	4192	78	B1-U3-G1
OTx-80W48LED3K-G2	48	530	80	5937	74	B1-U3-G1	5596	70	B1-U3-G1	6012	75	B1-U3-G2

Ordering Code: Globe (4000K)	Total LEDs	LED current (mA)	Average System Wattage[1] (W)	LE2A			LE3A			LE4A		
				Lumen Output[2]	Efficacy (LPW)	BUG Rating	Lumen Output[2]	Efficacy (LPW)	BUG Rating	Lumen Output[2]	Efficacy (LPW)	BUG Rating
OTx-35W32LED4K-G2	32	350	37	3559	96	B1-U3-G1	2913	79	B1-U2-G1	3130	85	B1-U2-G1
OTx-55W32LED4K-G2	32	530	54	5105	95	B1-U3-G1	4178	77	B1-U3-G1	4489	83	B1-U3-G2
OTx-72W32LED4K-G2	32	700	73	6439	88	B1-U3-G1	5269	72	B1-U3-G1	5662	78	B1-U3-G2
OTx-55W48LED4K-G2	48	350	54	5339	99	B1-U3-G1	4369	81	B1-U3-G1	4695	87	B1-U3-G2
OTx-80W48LED4K-G2	48	530	80	7658	96	B2-U3-G2	6267	78	B1-U3-G2	6734	84	B1-U3-G2

Actual performance may vary due to installation variables including optics, mounting/ceiling height, dirt depreciation, light loss factor, etc.; highly recommended to confirm performance with a layout - contact Applications at signify.com/outdoorluminaires.
Note: Some data may be scaled based on tests of similar. But not identical luminaires.

OT10-OT20 Optima LED Post Top

Urban Luminaire

Specifications

Housing

Finial: Decorative cast 356 aluminum, mechanically assembled.

Cupola: Decorative spun aluminum 1100-0, mechanically mounted on hood.

Hood: Spun aluminum 1100 0 dome, mechanically assembled on the luminaire.

Guard: In a round shape with 4 arms, this guard is a one piece cast aluminum 356 welded to the fitter

Access-mechanism

A die cast A360 aluminum technical ring with latch and hinge. The mechanism shall offer tool free access to the inside of the luminaire. An embedded memory retentive gasket shall ensure weatherproofing.

Light engine

LEDgine composed of 5 main components: Heat Sink / Lens / LED lamp / Driver / Optical System. Electrical components are RoHS compliant.

LED engine

Composed of high-performance white LEDs. Color temperature as per ANSI/NEMA bin Neutral White, 4000 Kelvin nominal (3985K +/-275K or 3710K to 4260K) or Warm white, 3000 Kelvin nominal (3045K +/- 175K or 2870K to 3220K), CRI 70 Min. 75 Typical.

Lens

LExF / LExS: Made of soda lime tempered glass lens, mechanically assembled and sealed onto the lower part of the heat sink.

LExA (Globe): Made of one-piece seamless injection-molded impact-resistant (DR) acrylic having an inner prismatic surface. The globe is mechanically assembled and sealed onto the lower part of the heat sink.

Heat sink

Made of cast aluminum optimizing the LEDs efficiency and life. Product does not use any cooling device with moving parts (only passive cooling device).

Optical system

Composed of high performance optical grade PMMA acrylic refractor lenses to achieve desired distribution optimized to get maximum spacing, target lumens and a superior lighting uniformity. Optical system is rated IP66. Performance shall be tested per LM 63, LM 79 and TM 15 (IESNA) certifying its photometric performance. Street side indicated.

Prismatic globe: IP66 rated optical system, composed of individual pre-oriented lens to achieve desired distribution, assembled with globe having an inner prismatic surface permanently sealed onto the lower part of the heat sink.

LE2A - Type II (ASYM) with globe (ACDR)
LE3A - Type III (ASYM) with globe (ACDR)
LE4A - Type IV (ASYM) with globe (ACDR)

Sag lens: IP66 rated optical system, composed of individual pre-oriented lens to achieve desired distribution, assembled with a tempered-glass sag lens permanently sealed onto the lower part of the heat sink.

LE2S - Type II (ASYM) with sag glass lens
LE3S - Type III (ASYM) with sag glass lens
LE4S - Type IV (ASYM) with sag glass lens
LE5S - Type V (SYMM) with sag glass lens

Flat lens: IP66 rated optical system, composed of individual preoriented lens to achieve desired distribution, assembled with a tempered-glass flat lens permanently sealed onto the lower part of the heat sink.

LE2F - Type II (ASYM) with flat glass lens
LE3F - Type III (ASYM) with flat glass lens
LE4F - Type IV (ASYM) with flat glass lens
LE5F - Type V (SYMM) with flat glass lens

Driver

Driver comes standard with dimming compatible 0-10V. High power factor of 90% minimum. Electronic driver, operating range 50/60 Hz. Auto adjusting universal voltage input from 120 to 277 or 347 to 480 VAC rated for both application line to line or line to neutral, Class I, THD of 20% max.

Maximum ambient operating temperature from 40°F (40°C) to 130°F (55°C). Certified in compliance to UL1310 cULus requirement. Dry and damp location. Assembled on a unitized removable tray with Tyco quick disconnect plug resisting to 221°F (105°C). The current supplying the LEDs will be reduced by the driver if the driver experiences internal overheating as a protection to the LEDs and the electrical components. Output is protected from short circuits, voltage overload and current overload. Automatic recovery after correction. Standard built in driver surge protection of 2.5kV (min).

Surge protector

Surge protector tested in accordance with ANSI/IEEE C62.45 per ANSI/IEEE C62.41.2 Scenario I Category C High Exposure 10kV/10kA waveforms for Line Ground, Line Neutral and Neutral Ground, and in accordance with U.S. DOE (Department of Energy) MSSLC (Municipal Solid State Street Lighting Consortium) model specification for LED roadway luminaires electrical immunity requirements for High Test Level 10kV / 10kA. SP2 20kV/20kA optional.

Driver options

AST: Pre-set driver for progressive start-up of the LED module(s) to optimize energy management and enhance visual comfort at start-up.

CLO: Pre-set driver to manage the lumen depreciation by adjusting the power given to the LEDs offering the same lighting intensity during the entire lifespan of the LED module.

OTL: Pre-set driver to signal end of life of the LED module(s) for better fixture management.

DMG: Dimmable driver 0-10V.

CDMG: Dynadimmer standard dimming functionalities including pre-programmed scenarios to suit many applications and needs from safety to maximum energy savings.

* Contact factory for DALI options.

Order Code	Dimming		
	Scenario	Duration	Level
CDMGS25	Safety	4 hours	25%
CDMGS50	Safety	4 hours	50%
CDMGS75	Safety	4 hours	75%
CDMGM25	Median	6 hours	25%
CDMGM50	Median	6 hours	50%
CDMGM75	Median	6 hours	75%
CDMGE25	Economy	8 hours	25%
CDMGE50	Economy	8 hours	50%
CDMGE75	Economy	8 hours	75%

SRD: Sensor Ready Driver including SR communication (used for dimming and other functionalities), 24V auxiliary supply and a logical signal input (LSI) connected to the top NEMA twist lock receptacle.

SRD1: Sensor Ready Driver including SR communication (used for dimming and other functionalities) but with 24V auxiliary supply and a logical signal input (LSI) not connected to the top NEMA twist lock.

LED Performance

Predicted lumen depreciation data[1]				
Ambient Temperature (°C)	Driver mA	Calculated L_{70} hours[1,2]	L_{70} per TM-21[2,3]	Lumen Maintenance % @ 60,000 hours
25°C	700 mA	>100,000	>60,000	86%

1. Predicted performance derived from LED manufacturer's data and engineering design estimates, based on IESNA LM-80 methodology. Actual experience may vary due to field application conditions.
2. L_{70} is the predicted time when LED performance depreciates to 70% of initial lumen output.
3. Calculated per IESNA TM21-11. Published L_{70} hours limited to 6 times actual LED test hours.

OT10-OT20 Optima LED Post Top

Urban Luminaire

Specifications (continued)

Luminaire options

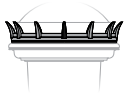

DA
Decorative arches

DC
Decorative cap

DF10 Decorative cupola (DF10 with OT10)

DF20 Decorative cupola (DF20 with OT20)

FN1 Decorative finial

FN2 Decorative finial

FN3 Decorative finial

FN5 Decorative finial

FN6 Decorative finial

FN8 Decorative finial

FN9 Decorative finial

FN10 Decorative finial

FNC Decorative finial painted copper

HS
House side shield

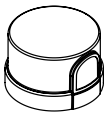

PH8
Photoelectric cell, twist-lock type. Allows 90° rotation

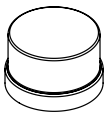

PH9
Shorting cap, twist-lock type

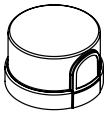

PHXL
Extended life Photoelectric cell, twist-lock type Allows 90° rotation

RC
Receptacle 3-pins

RCD7
Receptacle 7-pins

SP2 20kV/20kA integral surge protector (optional)

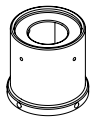

TN2.875C
2-7/8" dia. tenon adaptor

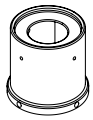

TN3
3" dia. tenon adaptor

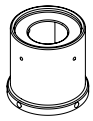

TN3.5
3-1/2" dia. tenon adaptor

Fitter

Cast 356 aluminum c/w 4 set screws 3/8 16 UNC. This fitter holds 2 arms made of cast aluminum 356 mechanically assembled. Slip fits on a 4" (102mm) outside diameter X 4" (102mm) long tenon.

Finish

In accordance with the AAMA 2603 standard. Application of polyester powder coat paint (4 mils/100 microns) with +/- 1 mils/24 microns of tolerance. The Thermosetting resins provides a discoloration resistant finish in accordance with the ASTM D2244 standard, as well as luster retention in keeping with the ASTM D523 standard and humidity proof in accordance with the ASTM D2247 standard. The surface treatment achieves a minimum of 2000 hours for salt spray resistant finish in accordance with testing performed and per ASTM B117 standard.

Textured Finish Options:

BE2TX: Textured Midnight Blue
BE6TX: Textured Ocean Blue
BE8TX: Textured Royal Blue
BG2TX: Textured Sandstone
BKTX: Textured Black
BRTX: Textured Bronze
GN4TX: Textured Blue Green
GN6TX: Textured Forest Green
GN8TX: Textured Dark Forest Green
GNTX: Textured Green
GY3TX: Textured Medium Grey
RD2TX: Textured Burgundy
RD4TX: Textured Scarlet
WHTX: Textured White

Non-Textured Finish Options:

GR: Gray Sandtex
NP: Natural Aluminum
TG: Hammer-tone Gold

Luminaire useful life

Refer to IES files for energy consumption and delivered lumens for each option. Based on ISTMT in situ thermal testing in accordance with UL1598 and UL8750, using LM-80 data from LED manufacturers and engineering prediction methods, the luminaire useful life is expected to reach 100,000+ hours with >L70 lumen maintenance @ 25°C. Luminaire Useful Life accounts for LED lumen maintenance AND all of these additional factors including: LED life, driver life, PCB substrate, solder joints, on/off cycles, burning hours and corrosion. Entire luminaire is rated for operation in ambient temperature of -40°C / -40°F up to +35°C / +95°F.

Hardware

All exposed screws shall be complete with Ceramic primer-seal base coat to reduce seizing of the parts and offers a high resistance to corrosion. All seals and sealing devices are made and/or lined with EPDM and/or silicone and/or rubber.

Wiring

Gauge (#14) TEW/AWM 1015 or 1230 wires, 6" (152mm) minimum exceeding from luminaire.

Quality control

Manufactured to ISO 9001 2008 standards and ISO 14001-2004 International Quality Standards Certification.

LED products (manufacturing standard)

The electronic components sensitive to electrostatic discharge (ESD) such as light emitting diodes (LEDs) are assembled in compliance with IEC61340 5 1 and ANSI/ ESD S20.20 standards so as to eliminate ESD events that could decrease the useful life of the product.

Quality control

Manufactured to ISO 9001 2008 standards and ISO 14001-2004 International Quality Standards Certification.

Certifications and Compliance

CSA, cULus Listed for Canada and USA.

Luminaires are DesignLights Consortium qualified.

OT10-OT20 Optima LED Post Top

Urban Luminaire

Poles

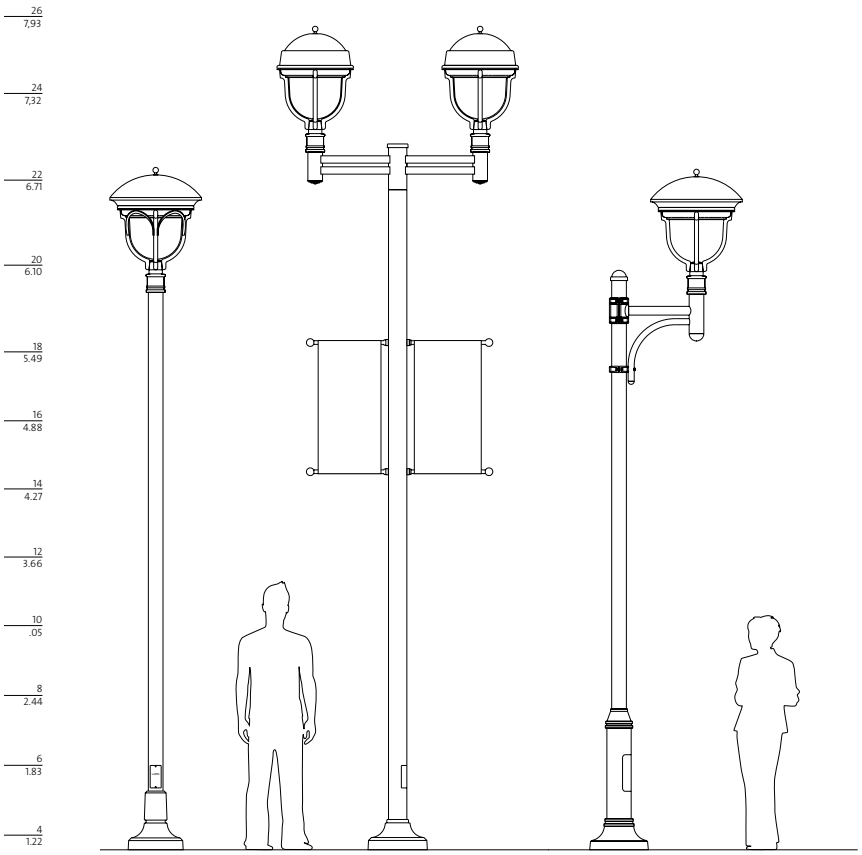

OT10-C-DA
Pole: APR4-LBC2

OT20-C
Mounting: JR-2
Pole: APR5-LBC4S-BA

OT10-C
Mounting: M30-1A
Pole: RAF805

Consult signify.com/outdoorluminaires for details and the complete line of Signify poles and brackets.

©2019 Signify Holding. All rights reserved. This document may be subject to change. No representation or warranty as to the accuracy or completeness of the information included herein is given and any liability for any action in reliance thereon is disclaimed. All trademarks are owned by Signify Holding or their respective owners.

Signify North America Corporation
200 Franklin Square Drive,
Somerset, NJ 08873
Telephone 855-486-2216

Signify Canada Ltd.
281 Hillmount Road,
Markham, ON, Canada L6C 2S3
Telephone 800-668-9008

San Francisco – Lumec Optima OT20 (3000K, RCD7 control ready, FAWS 73w-20w, HS)

LEDGINE Catalogue

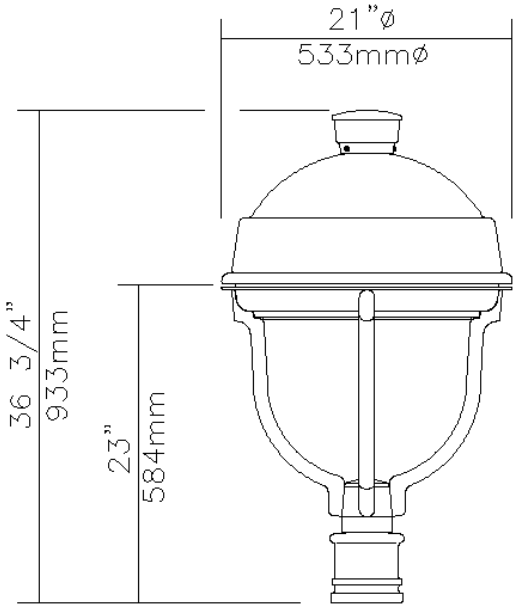

EPA: 1.99 sq ft / weight: 47 lb (21.4 kg)
Note: 3D image may not represent color or option selected.
Logos above include link, click to access.

Qty	Luminaire **[OT20-006]-72W32LED3K-G2-ACDR-LE3A-UNV-DMG-DF20-[FAWS-070]-HS-RCD7-BKTX**

Description of Components:

Cupola: (OT20-006) Decorative spun aluminum 1100-0, mechanically mounted on hood. **This cupola can be removed to install wireless control system.**

Hood: Spun aluminum 1100-0 dome, mechanically assembled on the luminaire.

Guard: In a round shape with 4 arms, this guard is a one-piece cast aluminum 356 welded to the fitter.

Access-Mechanism: A die cast A360 aluminum technical ring with latch and hinge. The mechanism shall offer tool-free access to the inside of the luminaire. An embedded memory-retentive gasket shall ensure weatherproofing.

Light Engine: LEDgine composed of 5 main components: **Globe / LED Module / Optical System / Heat Sink / Driver** Electrical components are RoHS compliant.

Heat Sink: Made of cast aluminum optimising the LEDs efficiency and life. Product does not use any cooling device with moving parts (only passive cooling device).

Globe: (ACDR), Made of one-piece seamless injection-molded impact-resistant (DR) acrylic having an inner prismatic surface. The globe is mechanically assembled and sealed onto the lower part of the heat sink.

LED Module: Composed of 32 high-performance white LEDs. Color temperature as per ANSI/NEMA bin Warm White, 3000 Kelvin nominal (3045K +/- 175K or 2870K to 3220K), CRI 70 Min. 75 Typical.

Optical System: (LE3A), IES type III (asymmetrical). Composed of high-performance optical grade PMMA acrylic refractor

PHILIPS LUMEC

lenses to achieve desired distribution optimized to get maximum spacing, target lumens and a superior lighting uniformity. Optical system is rated IP66. Performance shall be tested per LM-63, LM-79 and TM-15 (IESNA) certifying its photometric performance. Street side indicated.

Driver: High power factor of 90% minimum. Electronic driver, operating range 50/60 Hz. **Auto-adjusting universal voltage input from 120 to 277 VAC rated for both application line to line or line to neutral, Class I**, THD of 20% max. Maximum ambient operating temperature from -40F(-40C) to 130F(55C) degrees. **Driver comes with dimming compatible 0-10 volts.**

The current supplying the LEDs will be reduced by the driver if the driver experiences internal overheating as a protection to the LEDs and the electrical components. Output is protected from short circuits, voltage overload and current overload. Automatic recovery after correction. Standard built-in driver surge protection of 2.5kV (min).

Driver Options: (DMG), Dimming compatible 0-10 volts. For applicable warranty, certification and operation guide see *"Philips Lumec dimmable luminaire specification document for unapproved device installed by other*". To get document, click on this link: Specification document or go on web site on this address: http://www.lumec.com/Lumec3DV2/PdfWebLink/Philips Lumec dimmable luminaire specification document for unapproved device installed by other.pdf

Surge Protector: Surge protector tested in accordance with ANSI/IEEE C62.45 per ANSI/IEEE C62.41.2 Scenario I Category C High Exposure 10kV/10kA waveforms for Line-Ground, Line-Neutral and Neutral-Ground, and in accordance with U.S. DOE (Department of Energy) MSSLC (Municipal Solid-State Street Lighting Consortium) model specification for LED roadway luminaires electrical immunity requirements for High Test Level 10kV / 10kA.

Fitter: Cast aluminum 356 c/w 4 set screws 3/8-16 UNC. Fits on a 4"(102mm) outside diameter by 4"(102mm) long tenon.

Luminaire Options: (RCD7), Receptacle with 7 pins enabling dimming and with two extra connections for future use (these connections are capped off at the factory - requires connections to be made in the field), can be used with a twist-lock control device or photoelectric cell or a shorting cap. Use of photocell or shorting cap is required to ensure proper illumination.

Miscellaneous

Description of Components:

Wiring: Gauge (#14) TEW/AWM 1015 or 1230 wires, 6" (152mm) minimum exceeding from luminaire.

Hardware: All exposed screws shall be complete with Ceramic primer-seal basecoat to reduce seizing of the parts and offers a high resistance to corrosion. All seals and sealing devices are made and/or lined with EPDM and/or silicone and/or rubber.

Finish: Color to be **black textured RAL9005TX (BKTX)** and in accordance with the AAMA 2603 standard. Application of polyester powder coat paint (4 mils/100 microns) with ± 1 mils/24 microns of tolerance. The Thermosetting resins provides a discoloration resistant finish in accordance with the ASTM D2244 standard, as well as luster retention in keeping with the ASTM D523 standard and humidity proof in accordance with the ASTM D2247 standard.

The surface treatment achieves a minimum of 2000 hours for salt spray resistant finish in accordance with testing performed and per ASTM B117 standard.

LED products manufacturing standard: The electronic components sensitive to electrostatic discharge (ESD) such as light emitting diodes (LEDs) are assembled in compliance with IEC61340-5-1 and ANSI/ESD S20.20 standards so as to eliminate ESD events that could decrease the useful life of the product.

Quality Control: The manufacturer must provide a written confirmation of its ISO 9001-2008 and ISO 14001-2004 International Quality Standards Certification.

Web site information details: / cULus Certification

LED Wattage and Lumen Values: 3000K

PRISM GLOBE					LE2A			LE3A			LE4A		
Ordering Code	Total LEDs	System Current (mA)	Color Temp.	Avg System Wattage (W)	Delivered Lumens	BUG Rating	Efficacy (Lm/W)	Delivered Lumens	BUG Rating	Efficacy (Lm/W)	Delivered Lumens	BUG Rating	Efficacy (Lm/W)
35W32LED3K-G3	32	350	3000	37	4131	B1-U3-G1	112	4014	B1-U3-G1	108	4166	B1-U3-G1	113
55W32LED3K-G3	32	530	3000	54	5926	B1-U3-G1	110	5691	B1-U3-G1	105	5976	B1-U3-G2	111
72W32LED3K-G3	32	700	3000	73	7473	B2-U3-G2	102	7210	B2-U3-G2	99	7537	B1-U3-G2	103
55W48LED3K-G3	48	350	3000	54	6197	B1-U3-G1	115	6119	B1-U3-G2	113	6249	B1-U3-G2	116
80W48LED3K-G3	48	530	3000	80	8888	B2-U3-G2	111	8542	B2-U3-G2	107	8964	B2-U3-G2	112

LED Wattage and Lumen Values: 4000K

PRISM GLOBE					LE2A			LE3A			LE4A		
Ordering Code	Total LEDs	System Current (mA)	Color Temp.	Avg System Wattage (W)	Delivered Lumens	BUG Rating	Efficacy (Lm/W)	Delivered Lumens	BUG Rating	Efficacy (Lm/W)	Delivered Lumens	BUG Rating	Efficacy (Lm/W)
35W32LED4K-G3	32	350	4000	37	4338	B1-U3-G1	117	4215	B1-U3-G1	114	4374	B1-U3-G1	118
55W32LED4K-G3	32	530	4000	54	6222	B1-U3-G1	115	5976	B1-U3-G2	111	6275	B1-U3-G2	116
72W32LED4K-G3	32	700	4000	73	7847	B2-U3-G2	107	7571	B2-U3-G2	104	7914	B1-U3-G2	108
55W48LED4K-G3	48	350	4000	54	6507	B1-U3-G1	121	6425	B1-U3-G2	119	6561	B1-U3-G2	122
80W48LED4K-G3	48	530	4000	80	9332	B2-U3-G2	117	8969	B2-U3-G2	112	9412	B2-U3-G2	118

Actual performance may vary due to installation variables including optics, mounting/ceilling height, dirt depreciation, light loss factor, etc.; highly recommended to confirm performance with a layout - contact Applications at signify.com/outdoorluminaries.

San Francisco – Lumec Optima OT20 (3000K, 54w, LE2A, RCD7 control ready, SM6N pole)
(100 hps equivalent)

LED Wattage and Lumen Values: 4000K

Globe

				LE2A			LE3A			LE4A		
Ordering Code	Total LEDs	LED current (mA)	Average system watts [1] (W)	delivered lumens [2]	Efficacy (LPW)	BUG rating	delivered lumens [2]	Efficacy (LPW)	BUG rating	delivered lumens [2]	Efficacy (LPW)	BUG rating
35W32LED4K-G2	32	350	37	3559	96.2	B1-U3-G1	2913	78.7	B1-U2-G1	3130	84.6	B1-U2-G1
55W32LED4K-G2	32	530	54	5105	94.5	B1-U3-G1	4178	77.4	B1-U3-G1	4489	83.1	B1-U3-G2
72W32LED4K-G2	32	700	73	6439	88.2	B1-U3-G1	5269	72.2	B1-U3-G1	5662	77.6	B1-U3-G2
55W48LED4K-G2	48	350	54	5339	98.9	B1-U3-G1	4369	80.9	B1-U3-G1	4695	86.9	B1-U3-G2
80W48LED4K-G2	48	530	80	7658	95.7	B2-U3-G2	6267	78.3	B1-U3-G2	6734	84.2	B1-U3-G2

LED Wattage and Lumen Values: 3000K

Globe

				LE2A			LE3A			LE4A		
Ordering Code	Total LEDs	LED current (mA)	Average system watts [1] (W)	delivered lumens [2]	Efficacy (LPW)	BUG rating	delivered lumens [2]	Efficacy (LPW)	BUG rating	delivered lumens [2]	Efficacy (LPW)	BUG rating
35W32LED3K-G2	32	350	37	2759	74.6	B1-U3-G1	2601	70.3	B1-U2-G1	2794	75.5	B1-U2-G1
55W32LED3K-G2	32	530	54	3958	73.3	B1-U3-G1	3730	69.1	B1-U3-G1	4008	74.2	B1-U3-G1
72W32LED3K-G2	32	700	73	4992	68.4	B1-U3-G1	4705	64.4	B1-U3-G1	5055	69.2	B1-U3-G2
55W48LED3K-G2	48	350	54	4139	76.7	B1-U3-G1	3901	72.2	B1-U3-G1	4192	77.6	B1-U3-G1
80W48LED3K-G2	48	530	80	5937	74.2	B1-U3-G1	5596	69.9	B1-U3-G1	6012	75.2	B1-U3-G2

Actual performance may vary due to installation variables including optics, mounting/ceiling height, dirt depreciation, light loss factor, etc.; highly recommended to confirm performance with a layout - contact Applications: outdoorlighting.applications@philips.com

Note: Some data may be scaled based on tests of similar. But not identical luminaires.

PHILIPS
LUMEC

San Francisco – Lumec Optima OT20 (3000K, 80w, LE2A, RCD7 control ready, SM6N pole)
(150 hps equivalent)

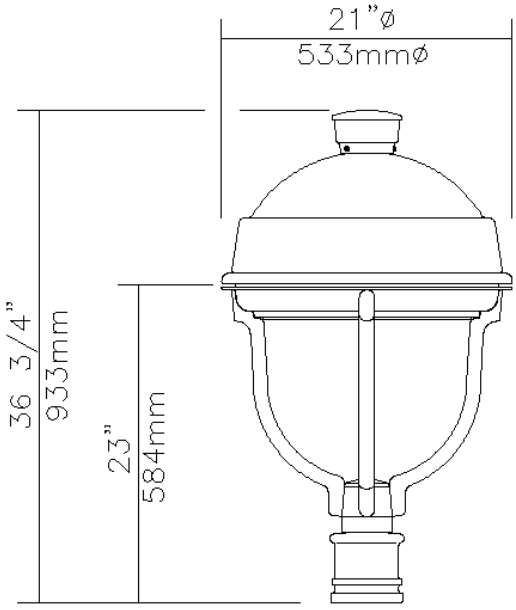

EPA: 1.99 sq ft / weight: 47 lb (21.4 kg)
Note: 3D image may not represent color or option selected.
Logos above include link, click to access.

Qty	Luminaire	**[OT20-006]-80W48LED3K-G2-ACDR-LE2A-UNV-DMG-DF20-RCD7-BKTX**

Description of Components:

Cupola: (OT20-006) Decorative spun aluminum 1100-0, mechanically mounted on hood. **This cupola can be removed to install wireless control system.**

Hood: Spun aluminum 1100-0 dome, mechanically assembled on the luminaire.

Guard: In a round shape with 4 arms, this guard is a one-piece cast aluminum 356 welded to the fitter.

Access-Mechanism: A die cast A360 aluminum technical ring with latch and hinge. The mechanism shall offer tool-free access to the inside of the luminaire. An embedded memory-retentive gasket shall ensure weatherproofing.

Light Engine: LEDgine composed of 5 main components: **Globe / LED Module / Optical System / Heat Sink / Driver** Electrical components are RoHS compliant.

Heat Sink: Made of cast aluminum optimising the LEDs efficiency and life. Product does not use any cooling device with moving parts (only passive cooling device).

Globe: (ACDR), Made of one-piece seamless injection-molded impact-resistant (DR) acrylic having an inner prismatic surface. The globe is mechanically assembled and sealed onto the lower part of the heat sink.

LED Module: Composed of 48 high-performance white LEDs. Color temperature as per ANSI/NEMA bin Warm White, 3000 Kelvin nominal (3045K +/- 175K or 2870K to 3220K), CRI 70 Min. 75 Typical.

PHILIPS
LUMEC

San Francisco – Lumec Optima OT20 (3000K, 80w, LE2A, RCD7 control ready, SM6N pole)
(150 hps equivalent)

Optical System: (LE2A), IES type II (asymmetrical). Composed of high-performance optical grade PMMA acrylic refractor lenses to achieve desired distribution optimized to get maximum spacing, target lumens and a superior lighting uniformity. Optical system is rated IP66. Performance shall be tested per LM-63, LM-79 and TM-15 (IESNA) certifying its photometric performance. Street side indicated.

Driver: High power factor of 90% minimum. Electronic driver, operating range 50/60 Hz. **Auto-adjusting universal voltage input from 120 to 277 VAC rated for both application line to line or line to neutral, Class I**, THD of 20% max. Maximum ambient operating temperature from -40F(-40C) to 130F(55C) degrees. **Driver comes with dimming compatible 0-10 volts.**

The current supplying the LEDs will be reduced by the driver if the driver experiences internal overheating as a protection to the LEDs and the electrical components. Output is protected from short circuits, voltage overload and current overload. Automatic recovery after correction. Standard built-in driver surge protection of 2.5kV (min).

Driver Options: (DMG), Dimming compatible 0-10 volts. For applicable warranty, certification and operation guide see *"Philips Lumec dimmable luminaire specification document for unapproved device installed by other*". To get document, click on this link: Specification document or go on web site on this address: http://www.lumec.com/Lumec3DV2/PdfWebLink/Philips Lumec dimmable luminaire specification document for unapproved device installed by other.pdf

Surge Protector: Surge protector tested in accordance with ANSI/IEEE C62.45 per ANSI/IEEE C62.41.2 Scenario I Category C High Exposure 10kV/10kA waveforms for Line-Ground, Line-Neutral and Neutral-Ground, and in accordance with U.S. DOE (Department of Energy) MSSLC (Municipal Solid-State Street Lighting Consortium) model specification for LED roadway luminaires electrical immunity requirements for High Test Level 10kV / 10kA.

Fitter: Cast aluminum 356 c/w 4 set screws 3/8-16 UNC. Fits on a 4"(102mm) outside diameter by 4"(102mm) long tenon.

Luminaire Options: (RCD7), Receptacle with 7 pins enabling dimming and with two extra connections for future use (these connections are capped off at the factory - requires connections to be made in the field), can be used with a twist-lock control device or photoelectric cell or a shorting cap. Use of photocell or shorting cap is required to ensure proper illumination.

PHILIPS
LUMEC

San Francisco – Lumec Optima OT20 (3000K, 80w, LE2A, RCD7 control ready, SM6N pole)
(150 hps equivalent)

Base & Bolts Information

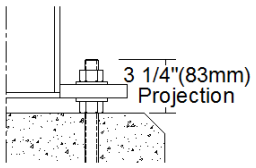

Requires: 4 steel anchor bolts, 1" X 42" Bolts, Fully Galvanized, (by others). Important: Do not obstruct space between anchor plate and concrete base.

Anchor Plate

-Bolt Circle:
10" (254mm)

- Material:
Steel

-Bolts Circle Allowed:
9 1/2" to 11"
241mm to 279mm

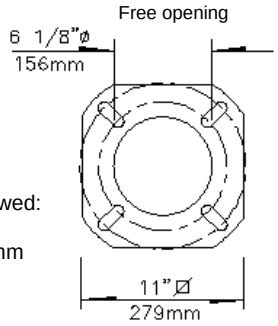

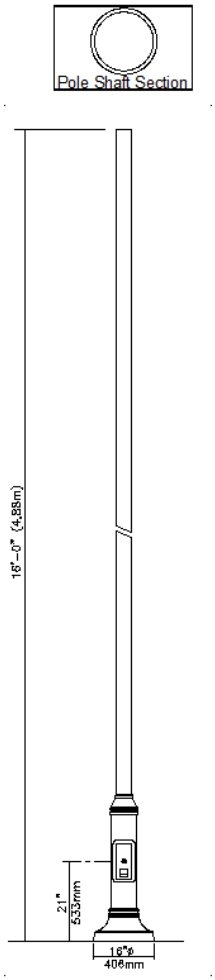

Qty Pole **[SM6N-007]-16-BLN1-IP-BKTX**

Description of Components:

Pole Shaft: Shall be made from a 4" (102mm) round high tensile carbon steel tubing, having a 0.188" (4.8mm) wall thickness, welded to the pole base.

Joint Cover: One-piece round joint cover made from cast 356 aluminum.

Pole Base: Shall be made from a 6 5/8" (168mm) round high tensile carbon steel tubing base having a 0.180" (4.6mm) wall thickness, welded to both the bottom and top of the anchor plate.

Maintenance Opening: The pole shall have a 4 1/2" x 10" (114mm x 254mm) maintenance opening centered 21" (533mm) from the bottom of the anchor plate, complete with a weatherproof embossed aluminum cover and a copper ground lug.

Base Cover: Two piece round base cover made from cast 356 aluminum, mechanically fastened with stainless steel screws.

Pole Options: (**BLN1**) Anchor plate accepting 1" (25mm) O.D. bolts.
(IP) The pole inner wall will be painted.

Note: A tenon will be provided when the luminaire or bracket does not fit directly on pole shaft. Tenon not shown on the drawing.

IMPORTANT: Philips Lumec strongly recommends the installation of the complete lighting assembly with all of its accessories upon the anchoring of the pole. This will ensure that the structural integrity of the product is maintained throughout its lifetime.

Pole Weight: 130 lbs (59.1 kg)

San Francisco – Lumec Optima OT20 (3000K, 80w, LE2A, RCD7 control ready, SM6N pole)
(150 hps equivalent)

Miscellaneous

Description of Components:

Wiring: Gauge (#14) TEW/AWM 1015 or 1230 wires, 6" (152mm) minimum exceeding from luminaire.

Hardware: All exposed screws shall be complete with Ceramic primer-seal basecoat to reduce seizing of the parts and offers a high resistance to corrosion. All seals and sealing devices are made and/or lined with EPDM and/or silicone and/or rubber.

Finish: Color to be **black textured RAL9005TX (BKTX)** and in accordance with the AAMA 2603 standard. Application of polyester powder coat paint (4 mils/100 microns) with ± 1 mils/24 microns of tolerance. The Thermosetting resins provides a discoloration resistant finish in accordance with the ASTM D2244 standard, as well as luster retention in keeping with the ASTM D523 standard and humidity proof in accordance with the ASTM D2247 standard.

The surface treatment achieves a minimum of 2000 hours for salt spray resistant finish in accordance with testing performed and per ASTM B117 standard.

LED products manufacturing standard: The electronic components sensitive to electrostatic discharge (ESD) such as light emitting diodes (LEDs) are assembled in compliance with IEC61340-5-1 and ANSI/ESD S20.20 standards so as to eliminate ESD events that could decrease the useful life of the product.

Quality Control: The manufacturer must provide a written confirmation of its ISO 9001-2008 and ISO 14001-2004 International Quality Standards Certification.

Mechanical resistance: This design information is intended as a general guideline only. The customer is solely responsible for proper selection of pole, luminaire, accessories and foundation under the given site conditions and intended usage. The addition of any other item to the pole may dramatically impact the wind load on that pole. It is strongly recommended that a qualified professional be consulted to analyze the loads given the user's specific needs to ensure proper selection of the pole, luminaire, accessories, and foundation. Philips Lumec assumes no responsibility for such complete analysis or product selection. Failure to insure proper site analysis, pole selection, loads and installation can result in pole failure, leading to serious injury or property damage.

Web site information details: Click on any specific information details you need:

Paint finish / Warranties / ISO 9001-2008 Certification / ISO 14001-2004 Certification / CSA Pole Certification

San Francisco – Lumec Optima OT20 (3000K, 80w, LE2A, RCD7 control ready, SM6N pole)
(150 hps equivalent)

LED Wattage and Lumen Values: 4000K

Globe

				LE2A			LE3A			LE4A		
Ordering Code	Total LEDs	LED current (mA)	Average system watts [1] (W)	delivered lumens [2]	Efficacy (LPW)	BUG rating	delivered lumens [2]	Efficacy (LPW)	BUG rating	delivered lumens [2]	Efficacy (LPW)	BUG rating
35W32LED4K-G2	32	350	37	3559	96.2	B1-U3-G1	2913	78.7	B1-U2-G1	3130	84.6	B1-U2-G1
55W32LED4K-G2	32	530	54	5105	94.5	B1-U3-G1	4178	77.4	B1-U3-G1	4489	83.1	B1-U3-G2
72W32LED4K-G2	32	700	73	6439	88.2	B1-U3-G1	5269	72.2	B1-U3-G1	5662	77.6	B1-U3-G2
55W48LED4K-G2	48	350	54	5339	98.9	B1-U3-G1	4369	80.9	B1-U3-G1	4695	86.9	B1-U3-G2
80W48LED4K-G2	48	530	80	7658	95.7	B2-U3-G2	6267	78.3	B1-U3-G2	6734	84.2	B1-U3-G2

LED Wattage and Lumen Values: 3000K

Globe

				LE2A			LE3A			LE4A		
Ordering Code	Total LEDs	LED current (mA)	Average system watts [1] (W)	delivered lumens [2]	Efficacy (LPW)	BUG rating	delivered lumens [2]	Efficacy (LPW)	BUG rating	delivered lumens [2]	Efficacy (LPW)	BUG rating
35W32LED3K-G2	32	350	37	2759	74.6	B1-U3-G1	2601	70.3	B1-U2-G1	2794	75.5	B1-U2-G1
55W32LED3K-G2	32	530	54	3958	73.3	B1-U3-G1	3730	69.1	B1-U3-G1	4008	74.2	B1-U3-G1
72W32LED3K-G2	32	700	73	4992	68.4	B1-U3-G1	4705	64.4	B1-U3-G1	5055	69.2	B1-U3-G2
55W48LED3K-G2	48	350	54	4139	76.7	B1-U3-G1	3901	72.2	B1-U3-G1	4192	77.6	B1-U3-G1
80W48LED3K-G2	48	530	80	5937	74.2	B1-U3-G1	5596	69.9	B1-U3-G1	6012	75.2	B1-U3-G2

Actual performance may vary due to installation variables including optics, mounting/ceiling height, dirt depreciation, light loss factor, etc.; highly recommended to confirm performance with a layout - contact Applications: outdoorlighting.applications@philips.com

Note: Some data may be scaled based on tests of similar. But not identical luminaires.

PHILIPS
LUMEC

LUMEC
by signify

Urban

Renaissance

RN20 / 30 (large)

Lumec's **Renaissance Series** mixes refinement together with ambition. The design reflects and evokes late 19th and early 20th century styling, perfectly suited for most urban and rural areas, while the state-of-the-art technology inside assures exceptional photometric performance, a long lifespan, and ease of maintenance.

Project:
Location:
Cat.No:
Type:
Lamps: Qty:
Notes:

Ordering guide: Luminaire

Example: RN20-90W80LED4K-T-ACDR-LE3R-120-DMG-SMA-RC-PH8-BKTX

Series	LED module		Lamp type	Globe material	Optical system	Voltage	Driver options
RN20 **RN30**	**4000K** **35W32LED4K** **55W32LED4K** **55W48LED4K** **70W64LED4K** **72W32LED4K** **80W48LED4K** **90W80LED4K** **108W48LED4K** **110W64LED4K** **135W80LED4K** **145W64LED4K** **180W80LED4K**	**3000K** **35W32LED3K** **55W32LED3K** **55W48LED3K** **70W64LED3K** **72W32LED3K** **80W48LED3K** **90W80LED3K** **108W48LED3K** **110W64LED3K** **135W80LED3K** **145W64LED3K** **180W80LED3K**	**T**	**ACDR** Acrylic globe **GL** Glass globe	*Globe* **LE2R**[7] Type II (ASYM) with globe **LE3R**[7] Type III (ASYM) with globe **LE4R**[7] Type IV (ASYM) with globe **LE5R**[1,7] Type V (SYMM) with globe *Sag lens* **LE2S** Type II (ASYM) Sag glass lens **LE3S** Type III (ASYM) Sag glass lens **LE4S** Type IV (ASYM) Sag glass lens **LE5S**[1] Type V (SYMM) Sag glass lens *Flat lens* **LE2F** Type II (ASYM) Flat glass lens **LE3F** Type III (ASYM) Flat glass lens **LE4F** Type IV (ASYM) Flat glass lens **LE5F**[1] Type V (SYMM) Flat glass lens	**120** 120V **208** 208V **240** 240V **277** 277V **347** 347V **480** 480V	**AST**[3] Pre-set, progressive start-up **CLO**[3] Pre-set, manage lumen depreciation **DALI**[3] Pre-set, compatible with the DALI control system **OTL**[3] Pre-set to signal end of life of the lamp **DMG** 0-10V **CDMGE25**[3] 8 hrs. 25% reduction **CDMGE50**[3] 8 hrs. 50% reduction **CDMGE75**[3] 8 hrs. 75% reduction **CDMGM25**[3] 6 hrs. 25% reduction **CDMGM50**[3] 6 hrs. 50% reduction **CDMGM75**[3] 6 hrs. 75% reduction **CDMGS25**[3] 4 hrs. 25% reduction **CDMGS50**[3] 4 hrs. 50% reduction **CDMGS75**[3] 4 hrs. 75% reduction **SRD**[3] Sensor ready driver, standard configuration **SRD1**[3] Sensor ready driver, alternate configuration

Ordering guide (continued)

Adaptors	Luminaire options	Poles & Brackets	Finish
MA1 1 1/4" NPT threaded hole adaptor **MA2** 1 1/2" NPT threaded hole adaptor **SMA**[8] Decorative retro side-mounted cast-aluminum, accepts tubes from 1 5/8" to 2 3/8" **SMB** Decorative contemporary side-mounted cast-aluminum, accepts tubes from 1 5/8" to 2 3/8"	**BO**[6] Bridge and Overpass **DE1** Decorative deflector **HS** House Side Shield **PH7** Photoelectric cell, bottom type **PH8**[2,4] Photoelectric cell **PH9**[2,4] Shorting cap **PHXL**[2,4] Photoelectric cell, extended life **RC**[2,5] Receptacle 3 pins **RCD**[2,5] Receptacle 5 pins **RCD7**[2,5] Receptacle 7 pins **SP2** Surge protector	Consult signify.com/outdoorluminaires for details and the complete line of Signify poles and brackets.	**BE2TX** Textured midnight blue **BE6TX** Textured ocean blue **BE8TX** Textured royal blue **BG2TX** Textured Sandstone **BKTX** Textured black **BRTX** Textured bronze **GN4TX** Textured blue green **GN6TX** Textured forest green **GN8TX** Textured Dk forest green **GNTX** Textured green **GR** Gray sandtex **GY3TX** Textured medium grey **NP** Natural aluminum **RD2TX** Textured burgundy **RD4TX** Textured scarlet **TG** Hammertone gold **WHTX** Textured white

1. Not available with **HS** option.
2. **SMA** or **SMB** adaptors is required for this option
3. Not available 347-480 volt.
4. Luminaire option **RC**, **RCD** or **RCD7** is required with this Options.
5. Use of photoelectric cell or shorting cap is required to ensure proper illumination.
6. Not available with **GL** Glass globe.
7. Globe material **ACDR** or **GL** is required with this optical system.
8. Only 3 pin receptacle **RC** is available with **SMA** adaptor.

RN20-30 Renaissance LED (large)

Urban Luminaire

Features

1. Constructed from top-quality materials, the Contemporary Lantern Series maintains excellent performance in even the most demanding environments.
2. Type LE2, LE3, LE4 and LE5 optic distributions are available with various options to meet a wide range of lighting applications.
3. Polycarbonate globe has satin-finish to gently obscure the source without compromising photometry.
4. Tool free access to lamp and electrical components for ease of maintenance.
5. Unique styling merges traditional and contemporary design.

Dimensions

EPA: 2.03 ft² max.
ACDR Weight: 49 lbs (22.2kg) max.
GL Weight: 69 lbs (31.3kg) max.
EPA and weight are calculated without adaptor

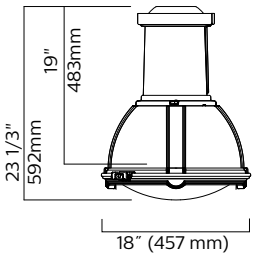

RN20 - S optics

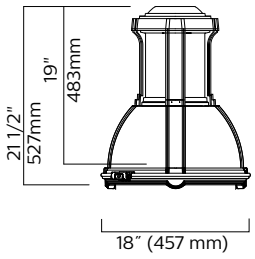

RN30 - F optics

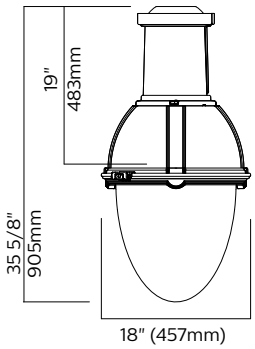

RN20 - A optics

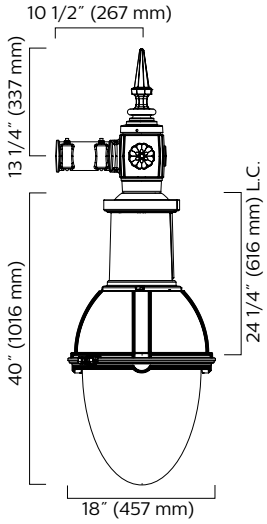

RN20 - A optics - SMA

Predicted Lumen Depreciation Data

Predicted performance derived from LED manufacturer's data and engineering design estimates, based on IESNA LM-80 methodology. Actual experience may vary due to field application conditions. L_{70} is the predicted time when LED performance depreciates to 70% of initial lumen output. Calculated per IESNA TM21-11. Published L_{70} hours limited to 6 times actual LED test hours.

Ambient Temperature °C	Driver mA	Calculated L_{70} Hours	L_{70} per TM-21	Lumen Maintenance % at 60,000 hrs
35°C	800 mA	>99,000 hours	>60,000 hours	>83%

RN20-30 Renaissance LED (large)

Urban Luminaire

LED Wattage and Lumen Values: 4000K Renaissance luminaire

Flat lens

Ordering Code	Total LEDs	LED Current (mA)	Average System Watts[1]	Color Temp.	Type LE2F			Type LE3F			Type LE4F			Type LE5F		
					Delivered Lumens[2]	Efficacy (LPW)	BUG Rating	Delivered Lumens[2]	Efficacy (LPW)	BUG Rating	Delivered Lumens[2]	Efficacy (LPW)	BUG Rating	Delivered Lumens[2]	Efficacy (LPW)	BUG Rating
RNx-35W32LED4K-T	32	350	37	4000K	4,005	108	B1-U0-G1	3,915	106	B1-U0-G1	3,931	106	B1-U0-G1	3,891	105	B3-U0-G1
RNx-55W32LED4K-T	32	530	55	4000K	5,773	105	B1-U0-G1	5,645	103	B1-U0-G1	5,667	103	B1-U0-G2	5,609	102	B3-U0-G1
RNx-72W32LED4K-T	32	700	71	4000K	7,200	101	B2-U0-G1	7,040	99	B1-U0-G2	7,067	100	B1-U0-G2	6,995	99	B3-U0-G2
RNx-55W48LED4K-T	48	350	53	4000K	6,005	113	B1-U0-G1	5,871	111	B1-U0-G1	5,894	111	B1-U0-G2	5,834	110	B3-U0-G1
RNx-80W48LED4K-T	48	530	80	4000K	8,615	108	B2-U0-G2	8,423	105	B2-U0-G2	8,456	106	B1-U0-G2	8,369	105	B3-U0-G2
RNx-108W48LED4K-T	48	700	105	4000K	10,859	103	B2-U0-G2	10,617	101	B2-U0-G2	10,659	102	B2-U0-G2	10,550	100	B4-U0-G2
RNx-70W64LED4K-T	64	350	69	4000K	7,939	115	B2-U0-G1	7,762	112	B1-U0-G2	7,793	113	B1-U0-G2	7,713	112	B3-U0-G2
RNx-110W64LED4K-T	64	530	105	4000K	11,337	108	B2-U0-G2	11,084	106	B2-U0-G2	11,128	106	B2-U0-G2	11,014	105	B4-U0-G2
RNx-145W64LED4K-T	64	700	140	4000K	14,232	102	B3-U0-G2	13,915	99	B2-U0-G2	13,969	100	B2-U0-G2	13,826	99	B4-U0-G2
RNx-90W80LED4K-T	80	350	85	4000K	9,897	116	B2-U0-G2	9,677	114	B2-U0-G2	9,715	114	B2-U0-G2	9,615	113	B4-U0-G2
RNx-135W80LED4K-T	80	530	130	4000K	14,074	108	B3-U0-G2	13,760	106	B2-U0-G2	13,814	106	B2-U0-G2	13,673	105	B4-U0-G2
RNx-180W80LED4K-T	80	700	175	4000K	17,571	100	B3-U0-G2	17,179	98	B3-U0-G2	17,246	99	B2-U0-G3	17,070	98	B4-U0-G2

Sag lens

Ordering Code	Total LEDs	LED Current (mA)	Average System Watts[1]	Color Temp.	Type LE2S			Type LE3S			Type LE4S			Type LE5S		
					Delivered Lumens[2]	Efficacy (LPW)	BUG Rating	Delivered Lumens[2]	Efficacy (LPW)	BUG Rating	Delivered Lumens[2]	Efficacy (LPW)	BUG Rating	Delivered Lumens[2]	Efficacy (LPW)	BUG Rating
RNx-35W32LED4K-T	32	350	37	4000K	3,991	108	B1-U0-G1	3,941	107	B1-U0-G1	3,958	107	B1-U0-G1	3,949	107	B3-U0-G1
RNx-55W32LED4K-T	32	530	55	4000K	5,754	105	B1-U0-G1	5,681	103	B1-U0-G1	5,706	104	B1-U0-G2	5,693	104	B3-U0-G1
RNx-72W32LED4K-T	32	700	71	4000K	7,177	101	B2-U0-G1	7,086	100	B1-U0-G2	7,117	100	B1-U0-G2	7,100	100	B3-U0-G2
RNx-55W48LED4K-T	48	350	53	4000K	5,985	113	B1-U0-G1	5,909	111	B1-U0-G2	5,935	112	B1-U0-G2	5,921	112	B3-U0-G2
RNx-80W48LED4K-T	48	530	80	4000K	8,586	107	B2-U0-G2	8,478	106	B1-U0-G2	8,515	106	B1-U0-G2	8,495	106	B4-U0-G2
RNx-108W48LED4K-T	48	700	105	4000K	10,823	103	B2-U0-G2	10,687	102	B2-U0-G2	10,734	102	B2-U0-G2	10,708	102	B4-U0-G2
RNx-70W64LED4K-T	64	350	69	4000K	7,913	115	B2-U0-G2	7,813	113	B1-U0-G2	7,847	114	B1-U0-G2	7,829	113	B3-U0-G2
RNx-110W64LED4K-T	64	530	105	4000K	11,300	108	B2-U0-G2	11,157	106	B2-U0-G2	11,206	107	B2-U0-G2	11,179	106	B4-U0-G2
RNx-145W64LED4K-T	64	700	140	4000K	14,185	101	B3-U0-G2	14,006	100	B2-U0-G2	14,067	100	B2-U0-G3	14,034	100	B4-U0-G2
RNx-90W80LED4K-T	80	350	85	4000K	9,864	116	B2-U0-G2	9,740	115	B2-U0-G2	9,783	115	B2-U0-G2	9,760	115	B4-U0-G2
RNx-135W80LED4K-T	80	530	130	4000K	14,027	108	B3-U0-G2	13,850	107	B2-U0-G2	13,911	107	B2-U0-G3	13,878	107	B4-U0-G2
RNx-180W80LED4K-T	80	700	175	4000K	17,512	100	B3-U0-G2	17,288	99	B2-U0-G3	17,367	99	B2-U0-G3	17,326	99	B5-U0-G3

1. System input wattage may vary based on input voltage, by up to +/- 10% , and based on manufacturer forward voltage, by up to +/- 8%.
2. Lumen values based on photometric tests performed in compliance with IESNA LM-79.

Note: Some data may be scaled based on tests of similar, but not identical, luminaires.

RN20-30 Renaissance LED (large)

Urban Luminaire

LED Wattage and Lumen Values: 4000K Renaissance luminaire (continued)

Globe

Ordering Code	Total LEDs	LED Current (mA)	Average System Watts[1]	Color Temp.	Type LE2R			Type LE3R			Type LE4R			Type LE5R		
					Delivered Lumens[2]	Efficacy (LPW)	BUG Rating	Delivered Lumens[2]	Efficacy (LPW)	BUG Rating	Delivered Lumens[2]	Efficacy (LPW)	BUG Rating	Delivered Lumens[2]	Efficacy (LPW)	BUG Rating
RNx-35W32LED4K-T	32	350	37	4000K	4,281	116	B1-U3-G1	4,285	116	B1-U3-G1	4,315	117	B1-U3-G1	4,347	117	B3-U3-G1
RNx-55W32LED4K-T	32	530	55	4000K	6,172	112	B1-U3-G1	6,177	112	B1-U3-G2	6,221	113	B1-U3-G2	6,266	114	B3-U3-G2
RNx-72W32LED4K-T	32	700	71	4000K	7,697	108	B2-U3-G2	7,705	109	B2-U3-G2	7,759	109	B1-U3-G2	7,815	110	B3-U3-G2
RNx-55W48LED4K-T	48	350	53	4000K	6,419	121	B1-U3-G1	6,425	121	B1-U3-G2	6,471	122	B1-U3-G2	6,518	123	B3-U3-G2
RNx-80W48LED4K-T	48	530	80	4000K	9,210	115	B2-U3-G2	9,218	115	B2-U3-G2	9,283	116	B2-U3-G2	9,350	117	B4-U3-G2
RNx-108W48LED4K-T	48	700	105	4000K	11,609	111	B2-U3-G2	11,620	111	B2-U3-G2	11,702	111	B2-U3-G2	11,786	112	B4-U3-G2
RNx-70W64LED4K-T	64	350	69	4000K	8,487	123	B2-U3-G2	8,495	123	B2-U3-G2	8,555	124	B2-U3-G2	8,617	125	B4-U3-G2
RNx-110W64LED4K-T	64	530	105	4000K	12,120	115	B2-U3-G2	12,131	116	B2-U3-G2	12,217	116	B2-U3-G2	12,305	117	B4-U3-G2
RNx-145W64LED4K-T	64	700	140	4000K	15,214	109	B3-U3-G3	15,229	109	B3-U3-G3	15,336	110	B2-U3-G3	15,447	110	B4-U3-G2
RNx-90W80LED4K-T	80	350	85	4000K	10,580	124	B2-U3-G2	10,590	125	B2-U3-G2	10,665	125	B2-U3-G2	10,742	126	B4-U3-G2
RNx-135W80LED4K-T	80	530	130	4000K	15,045	116	B3-U3-G3	15,059	116	B3-U3-G3	15,165	117	B2-U3-G3	15,275	118	B4-U3-G2
RNx-180W80LED4K-T	80	700	175	4000K	18,783	107	B3-U3-G3	18,736	107	B3-U3-G3	18,933	108	B3-U3-G3	19,070	109	B5-U3-G3

LED Wattage and Lumen Values: 3000K Renaissance luminaire

Flat lens

Ordering Code	Total LEDs	LED Current (mA)	Average System Watts[1]	Color Temp.	Type LE2F			Type LE3F			Type LE4F			Type LE5F		
					Delivered Lumens[2]	Efficacy (LPW)	BUG Rating	Delivered Lumens[2]	Efficacy (LPW)	BUG Rating	Delivered Lumens[2]	Efficacy (LPW)	BUG Rating	Delivered Lumens[2]	Efficacy (LPW)	BUG Rating
RNx-35W32LED3K-T	32	350	37	3000K	3,591	97	B1-U0-G1	3,510	95	B1-U0-G1	3,528	95	B1-U0-G1	3,492	94	B1-U0-G1
RNx-55W32LED3K-T	32	530	55	3000K	5,176	94	B1-U0-G1	5,061	92	B1-U0-G1	5,086	92	B1-U0-G1	5,034	92	B1-U0-G1
RNx-72W32LED3K-T	32	700	71	3000K	6,456	91	B2-U0-G1	6,312	89	B1-U0-G1	6,344	89	B1-U0-G2	6,279	88	B1-U0-G2
RNx-55W48LED3K-T	48	350	53	3000K	5,384	102	B1-U0-G1	5,264	99	B1-U0-G1	5,290	100	B1-U0-G2	5,236	99	B1-U0-G2
RNx-80W48LED3K-T	48	530	80	3000K	7,724	97	B2-U0-G1	7,552	94	B1-U0-G2	7,590	95	B1-U0-G2	7,513	94	B1-U0-G2
RNx-108W48LED3K-T	48	700	105	3000K	9,736	93	B2-U0-G2	9,519	91	B2-U0-G2	9,567	91	B2-U0-G2	9,470	90	B2-U0-G2
RNx-70W64LED3K-T	64	350	69	3000K	7,118	103	B2-U0-G1	6,959	101	B1-U0-G2	6,995	101	B1-U0-G2	6,923	100	B1-U0-G2
RNx-110W64LED3K-T	64	530	105	3000K	10,165	97	B2-U0-G2	9,938	95	B2-U0-G2	9,988	95	B1-U0-G1	9,886	94	B1-U0-G1
RNx-145W64LED3K-T	64	700	140	3000K	12,760	91	B3-U0-G2	12,476	89	B2-U0-G2	12,539	90	B2-U0-G2	12,411	89	B2-U0-G2
RNx-90W80LED3K-T	80	350	85	3000K	8,874	104	B2-U0-G2	8,676	102	B2-U0-G2	8,720	103	B2-U0-G2	8,631	102	B2-U0-G2
RNx-135W80LED3K-T	80	530	130	3000K	12,618	97	B3-U0-G2	12,337	95	B2-U0-G2	12,399	95	B2-U0-G2	12,273	94	B2-U0-G2
RNx-180W80LED3K-T	80	700	175	3000K	15,753	90	B3-U0-G2	15,402	88	B2-U0-G2	15,480	88	B2-U0-G3	15,322	88	B2-U0-G3

1. System input wattage may vary based on input voltage, by up to +/- 10% , and based on manufacturer forward voltage, by up to +/- 8%.
2. Lumen values based on photometric tests performed in compliance with IESNA LM-79.

Note: Some data may be scaled based on tests of similar, but not identical, luminaires.

RN20-30 Renaissance LED (large)

Urban Luminaire

LED Wattage and Lumen Values: 3000K Renaissance luminaire (continued)

Sag lens

Ordering Code	Total LEDs	LED Current (mA)	Average System Watts[1]	Color Temp.	Type LE2S			Type LE3S			Type LE4S			Type LE5S		
					Delivered Lumens[2]	Efficacy (LPW)	BUG Rating	Delivered Lumens[2]	Efficacy (LPW)	BUG Rating	Delivered Lumens[2]	Efficacy (LPW)	BUG Rating	Delivered Lumens[2]	Efficacy (LPW)	BUG Rating
RNx-35W32LED3K-T	32	350	37	3000K	3,579	97	B1-U0-G1	3,534	96	B1-U0-G1	3,555	96	B1-U0-G1	3,547	96	B3-U0-G1
RNx-55W32LED3K-T	32	530	55	3000K	5,159	94	B1-U0-G1	5,094	93	B1-U0-G1	5,125	93	B1-U0-G2	5,113	93	B3-U0-G1
RNx-72W32LED3K-T	32	700	71	3000K	6,435	91	B1-U0-G1	6,353	89	B1-U0-G2	6,391	90	B1-U0-G2	6,377	90	B3-U0-G2
RNx-55W48LED3K-T	48	350	53	3000K	5,366	101	B1-U0-G1	5,298	100	B1-U0-G1	5,330	101	B1-U0-G2	5,318	100	B3-U0-G1
RNx-80W48LED3K-T	48	530	80	3000K	7,699	96	B2-U0-G2	7,602	95	B1-U0-G2	7,647	96	B1-U0-G2	7,630	95	B3-U0-G2
RNx-108W48LED3K-T	48	700	105	3000K	9,705	92	B2-U0-G2	9,582	91	B2-U0-G2	9,639	92	B1-U0-G2	9,617	92	B4-U0-G2
RNx-70W64LED3K-T	64	350	69	3000K	7,095	103	B2-U0-G1	7,005	102	B1-U0-G2	7,047	102	B1-U0-G2	7,031	102	B3-U0-G2
RNx-110W64LED3K-T	64	530	105	3000K	10,131	96	B2-U0-G2	10,003	95	B2-U0-G2	10,063	96	B2-U0-G2	10,040	96	B4-U0-G2
RNx-145W64LED3K-T	64	700	140	3000K	12,719	91	B2-U0-G2	12,558	90	B2-U0-G2	12,633	90	B2-U0-G2	12,604	90	B4-U0-G2
RNx-90W80LED3K-T	80	350	85	3000K	8,845	104	B2-U0-G2	8,733	103	B1-U0-G2	8,785	103	B1-U0-G2	8,765	103	B4-U0-G2
RNx-135W80LED3K-T	80	530	130	3000K	12,577	97	B2-U0-G2	12,418	96	B2-U0-G2	12,492	96	B2-U0-G2	12,464	96	B4-U0-G2
RNx-180W80LED3K-T	80	700	175	3000K	15,702	90	B3-U0-G2	15,504	89	B2-U0-G2	15,596	89	B2-U0-G3	15,561	89	B4-U0-G2

Globe

Ordering Code	Total LEDs	LED Current (mA)	Average System Watts[1]	Color Temp.	Type LE2R			Type LE3R			Type LE4R			Type LE5R		
					Delivered Lumens[2]	Efficacy (LPW)	BUG Rating	Delivered Lumens[2]	Efficacy (LPW)	BUG Rating	Delivered Lumens[2]	Efficacy (LPW)	BUG Rating	Delivered Lumens[2]	Efficacy (LPW)	BUG Rating
RNx-35W32LED3K-T	32	350	37	3000K	3,837	104	B1-U3-G1	3,841	104	B1-U2-G1	3,868	105	B1-U3-G1	3,896	105	B3-U3-G1
RNx-55W32LED3K-T	32	530	55	3000K	5,532	101	B1-U3-G1	5,537	101	B1-U3-G1	5,576	101	B1-U3-G2	5,616	102	B3-U3-G1
RNx-72W32LED3K-T	32	700	71	3000K	6,899	97	B2-U3-G2	6,906	97	B2-U3-G2	6,954	98	B1-U3-G2	7,005	99	B3-U3-G2
RNx-55W48LED3K-T	48	350	53	3000K	5,754	109	B1-U3-G1	5,759	109	B1-U3-G2	5,800	109	B1-U3-G2	5,842	110	B3-U3-G1
RNx-80W48LED3K-T	48	530	80	3000K	8,254	103	B2-U3-G2	8,262	103	B2-U3-G2	8,320	104	B2-U3-G2	8,381	105	B4-U3-G2
RNx-108W48LED3K-T	48	700	105	3000K	10,405	99	B2-U3-G2	10,415	99	B2-U3-G2	10,488	100	B2-U3-G2	10,564	101	B4-U3-G2
RNx-70W64LED3K-T	64	350	69	3000K	7,607	110	B2-U3-G2	7,614	110	B2-U3-G2	7,668	111	B1-U3-G2	7,723	112	B3-U3-G2
RNx-110W64LED3K-T	64	530	105	3000K	10,863	103	B2-U3-G2	10,873	104	B2-U3-G2	10,950	104	B2-U3-G2	11,029	105	B4-U3-G2
RNx-145W64LED3K-T	64	700	140	3000K	13,636	97	B3-U3-G3	13,649	97	B2-U3-G2	13,746	98	B2-U3-G3	13,845	99	B4-U3-G2
RNx-90W80LED3K-T	80	350	85	3000K	9,483	112	B2-U3-G2	9,492	112	B2-U3-G2	9,559	112	B2-U3-G2	9,628	113	B4-U3-G2
RNx-135W80LED3K-T	80	530	130	3000K	13,485	104	B3-U3-G3	13,497	104	B2-U3-G2	13,593	105	B2-U3-G3	13,691	105	B4-U3-G2
RNx-180W80LED3K-T	80	700	175	3000K	16,835	96	B3-U3-G3	16,851	96	B3-U3-G3	16,970	97	B3-U3-G3	17,093	98	B5-U3-G3

1. System input wattage may vary based on input voltage, by up to +/- 10% , and based on manufacturer forward voltage, by up to +/- 8%.
2. Lumen values based on photometric tests performed in compliance with IESNA LM-79.

Note: Some data may be scaled based on tests of similar, but not identical, luminaires.

RN20-30 Renaissance LED (large)

Urban Luminaire

Specifications:

Hood

Injection die cast A360.1 aluminum dome, mechanically assembled on the luminaire housing.

Housing

In a round shape, this housing is made of injection die cast A360.1 aluminum, complete with a weatherproof door giving a tool free access to the ballast, without disconnection of wiring, mechanically assembled. This suspension system permits a full rotation of the luminaire in 90° increments.

Access-mechanism

Injection die cast A360.1 aluminum frame with latch and hinge, complete with cast in security block for frame's open position. The mechanism shall offer tool free access to the inside of the luminaire. An embedded memory retentive gasket shall ensure weatherproofing.

Light engine

LEDgine composed of 5 main components:
Globe / Heat Sink /LED module / Optical System / Driver

Electrical components are RoHS compliant.

Globe

LExR: Made of one-piece seamless injection-molded (**ACDR**) DR acrylic or (**GL**) clear borosilicate glass globe having an inner prismatic surface. Complete with a semi-prismatic house side shield and external glare softening prisms. The globe is mechanically assembled and sealed onto the lower part of the heat sink.

LExF/LExS: Made of soda lime tempered glass lens, mechanically assembled and sealed onto the lower part of the heat sink.

Heat sink

Made of cast aluminum optimizing the LEDs efficiency and life. Product does not use any cooling device with moving parts (only passive cooling device).

LED engine

LED type: Lumileds LUXEON T. Composed of high-performance white LEDs. Color temperature as per ANSI/NEMA bin Neutral White, 4000 Kelvin nominal (3985K +/- 275K or 3710K to 4260K) or Warm white, 3000 Kelvin nominal (3045K +/- 175K or 2870K to 3220K), CRI 70 Min. 75 Typical.

Optical system

LE2F/R/S (type II asymmetrical), **LE3F/R/S** (type III asymmetrical), **LE4F/R/S** (type IV asymmetrical), **LE5F/R/S** (type V symmetrical) light distributions (**F**= flat lens, **R**= globe, **S**- sag lens). Composed of high performance optical grade PMMA acrylic refractor lenses to achieve desired distribution optimized to get maximum spacing, target lumens and a superior lighting uniformity. Optical system is rated IP66. Performance shall be tested per LM 63, LM 79 and TM 15 (IESNA) certifying its photometric performance. Street side indicated. For Flat Lens only: Dark Sky compliant with 0% uplight and U0 per IESNA TM 15.

Prismatic globe: IP66 rated optical system, composed of individual pre-oriented lens to achieve desired distribution, assembled with globe having an inner prismatic surface permanently sealed onto the lower part of the heat sink.

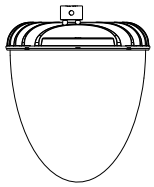

LE2R - Type II (ASYM) with globe
LE3R - Type III (ASYM) with globe
LE4R - Type IV (ASYM) with globe
LE5R - Type V (SYMM) with globe

Sag lens: IP66 rated optical system, composed of individual pre-oriented lens to achieve desired distribution, assembled with a tempered-glass sag lens permanently sealed onto the lower part of the heat sink.

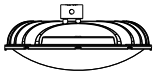

LE2S - Type II (ASYM) Sag glass lens
LE3S - Type III (ASYM) Sag glass lens
LE4S - Type IV (ASYM) Sag glass lens
LE5S - Type V (SYMM) Sag glass lens

Flat lens: IP66 rated optical system, composed of individual pre-oriented lens to achieve desired distribution, assembled with a tempered-glass flat lens permanently sealed onto the lower part of the heat sink.

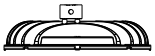

LE2F - Type II (ASYM) Flat glass lens
LE3F - Type III (ASYM) Flat glass lens
LE4F - Type IV (ASYM) Flat glass lens
LE5F - Type V (SYMM) Flat glass lens

Driver

Driver comes standard with dimming compatible 0-10V. High power factor of 95%. Electronic driver, operating range 50/60 Hz. Auto adjusting universal voltage input from 120 to 277 VAC rated for both application line to line or line to neutral, Class I, THD of 20% max. Maximum ambient operating temperature from -40F (-40C) to 130F (55C) degrees. Certified in compliance to UL1310 cULus requirement. Dry and damp location. Assembled on a unitized removable tray with Tyco quick disconnect plug resisting to 221F(105C) degrees. The current supplying the LEDs will be reduced by the driver if the driver experiences internal overheating as a protection to the LEDs and the electrical components. Output is protected from short circuits, voltage overload and current overload. Automatic recovery after correction. Standard built in driver surge protection of 2.5kV (min).

Surge protector

Surge protector tested in accordance with ANSI/IEEE C62.45 per ANSI/IEEE C62.41.2 Scenario I Category C High Exposure 10kV/10kA waveforms for Line Ground, Line Neutral and Neutral Ground, and in accordance with U.S. DOE (Department of Energy) MSSLC (Municipal Solid State Street Lighting Consortium) model specification for LED roadway luminaires electrical immunity requirements for High Test Level 10kV / 10kA. Option for SP2 20kV/20kA.

RN20-30 Renaissance LED (large)

Urban Luminaire

Specifications (continued):

Driver options

AST: Pre-set driver for progressive start-up of the LED module(s) to optimize energy management and enhance visual comfort at start-up.

CLO: Pre-set driver to manage the lumen depreciation by adjusting the power given to the LEDs offering the same lighting intensity during the entire lifespan of the LED module.

DALI: Pre-set driver compatible with the DALI control system.

OTL: Pre-set driver to signal end of life of the LED module(s) for better fixture management.

DMG: Dimmable driver 0-10V.

CDMG: Dynadimmer standard dimming functionalities including pre-programmed scenarios to suit many applications and needs from safety to maximum energy savings.

Order Code	Dimming		
	Scenario	Duration	Level
CDMGS25	Safety	4 hours	25%
CDMGS50	Safety	4 hours	50%
CDMGS75	Safety	4 hours	75%
CDMGM25	Median	6 hours	25%
CDMGM50	Median	6 hours	50%
CDMGM75	Median	6 hours	75%
CDMGE25	Economy	8 hours	25%
CDMGE50	Economy	8 hours	50%
CDMGE75	Economy	8 hours	75%

SRD: Sensor Ready Driver including SR communication (used for dimming and other functionalities), 24V auxiliary supply and a logical signal input (LSI) connected to the top NEMA twist lock receptacle.

SRD1: Sensor Ready Driver including SR communication (used for dimming and other functionalities) but with 24V auxiliary supply and a logical signal input (LSI) not connected to the top NEMA twist lock.

Luminaire adaptor

MA1: The luminaire is suspended by means of a mounting adaptor with a 1¼" (32mm) NPT threaded hole accepting a threaded tube from the mounting. Retrofit adaptor for existing mounting

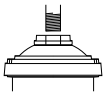

MA2: 1½" (38mm) NPT threaded hole accepting threaded tube from the mounting. Retrofit adaptor for existing mounting.

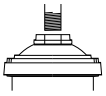

SMA: The luminaire is suspended by means of a decorative side-mounted cast aluminum adaptor. This adaptor accepts tubes from 1⅝" to 2⅜" (41 to 60mm) and is adjustable to more or less 5°. The adaptor features a cast aluminum decorative cover and finial.

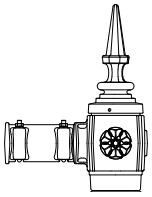

SMB: The luminaire is suspended by means of a decorative side-mounted cast aluminum adaptor. This adaptor accepts tubes from 1⅝" to 2⅜" (41 to 60mm) and is adjustable to more or less 5°.

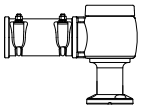

Luminaire options

DE1: Decorative deflector

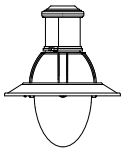

BO: Bridge and Overpass

HS: House side shield

PH7: Photoelectric cell, bottom type

RC: Receptacle 3 pins

RCD: Receptacle 5 pins

RCD7: Receptacle 7 pins

SP2: Integral surge protector

Luminaire accessories

PH8: Photoelectric Cell, Twist-lock Type. Allows a 90° rotation.

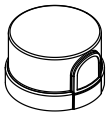

PHXL: Extended life photoelectric cell, Twist-lock Type. Allows a 90° rotation.

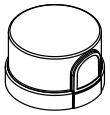

PH9: Shorting cap, Twist-lock Type.

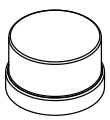

RN20-30 Renaissance LED (large)

Urban Luminaire

Specifications (continued):

Finish

The Thermosetting powder coating provided meets the color requirements of the AAMA 2604 specification as measured per ASTM D2244. The Thermosetting product is applied at a dry film of 2.5 to 4.0 mils (64-102 microns) on textured finishes, resulting in a durable long lasting finish.

Finish Options Include:
BE2TX: Textured Midnight Blue
BE6TX: Textured Ocean Blue
BE8TX: Textured Royal Blue
BG2TX: Textured Sandstone
BKTX: Textured Black
BRTX: Textured Bronze
GN4TX: Textured Blue Green
GN6TX: Textured Forest Green
GN8TX: Textured Dark Forest Green
GNTX: Textured Green
GR: Gray Sandtex
GY3TX: Textured Medium Grey
NP: Natural Aluminum
RD2TX: Textured Burgundy
RD4TX: Textured Scarlet
TG: Hammer-tone Gold
TS: Hammer-tone Silver
WHTX: Textured White

Wiring

Gauge (#14) TEW/AWM 1015 or 1230 wires, 6" (152mm) minimum exceeding from luminaire.

Hardware

All exposed screws shall be complete with Ceramic primer-seal base coat to reduce seizing of the parts and offers a high resistance to corrosion. All seals and sealing devices are made and/or lined with EPDM and/or silicone and/or rubber.

LED products (manufacturing standard)

The electronic components sensitive to electrostatic discharge (ESD) such as light emitting diodes (LEDs) are assembled in compliance with IEC61340 5 1 and ANSI/ESD S20.20 standards so as to eliminate ESD events that could decrease the useful life of the product.

Quality control

Manufactured to ISO 9001 2008 standards and ISO 14001-2004 International Quality Standards Certification.

Vibration resistance

Meets the ANSI C136.31, American National Standard for Roadway Luminaire Vibration specifications for Bridge/overpass applications. (Tested for 3G over 100 000 cycles)

Certifications and Compliance

UL8750 and UL1598 compliant. ETL and cETL Listed to U.S. and Canadian safety standards for wet locations. In accordance with applicable ANSI C136 standards. Renaissance LED luminaires are DesignLights Consortium qualified.

©2019 Signify Holding. All rights reserved. This document may be subject to change. No representation or warranty as to the accuracy or completeness of the information included herein is given and any liability for any action in reliance thereon is disclaimed. All trademarks are owned by Signify Holding or their respective owners.

Signify North America Corporation
200 Franklin Square Drive,
Somerset, NJ 08873
Telephone 855-486-2216

Signify Canada Ltd.
281 Hillmount Road,
Markham, ON, Canada L6C 2S3
Telephone 800-668-9008

LUMEC
by signify

Urban

Renaissance

RNS (small)

Lumec's **Renaissance** Series mixes refinement together with ambition. The design reflects and evokes late 19th and early 20th century styling, perfectly suited for most urban and rural areas, while the state-of-the-art technology inside assures exceptional photometric performance, a long lifespan, and ease of maintenance.

Project:
Location:
Cat.No:
Type:
Lamps: Qty:
Notes:

Ordering guide: Luminaire

Example: RNS20-35W32LED4K-T-ACDR-LE5-120-DMG-SMA-RC-BKTX

Series	LED module		Lamp type	Globe material	Optical system	Voltage	Driver options
RNS20	4000K	3000K	T	**ACDR** Acrylic globe **GL** Glass globe	**LE2** Type II (ASYM) **LE3** Type III (ASYM) **LE4** Type IV (ASYM) **LE5**[1] Type V (SYMM)	**120** 120V **208** 208V **240** 240V **277** 277V **347** 347V **480** 480V	**AST** Pre-set, progressive start-up **CLO** Pre-set, manage lumen depreciation **DALI** Pre-set, compatible with the DALI control system **OTL** Pre-set to signal end of life of the lamp **DMG** 0-10V **CDMGE25** 8 hrs. 25% reduction **CDMGE50** 8 hrs. 50% reduction **CDMGE75** 8 hrs. 75% reduction **CDMGM25** 6 hrs. 25% reduction **CDMGM50** 6 hrs. 50% reduction **CDMGM75** 6 hrs. 75% reduction **CDMGS25** 4 hrs. 25% reduction **CDMGS50** 4 hrs. 50% reduction **CDMGS75** 4 hrs. 75% reduction **SRD**[3] Sensor ready driver, standard configuration **SRD1**[3] Sensor ready driver, alternate configuration
	24W16LED4K **30W16LED4K** **35W32LED4K** **55W32LED4K**	**24W16LED3K** **30W16LED3K** **35W32LED3K** **55W32LED3K**					

Ordering guide (continued)

Adaptors	Luminaire options	Poles & Brackets	Finish
MA1 1 1/4" NPT threaded hole adaptor **MA2** 1 1/2" NPT threaded hole adaptor **SMA**[6] Decorative retro side-mounted cast-aluminum, accepts tubes from 1 5/8" to 2 3/8" **SMB** Decorative contemporary side-mounted cast-aluminum, accepts tubes from 1 5/8" to 2 3/8" **YM** Yoke mount	**DE1** Decorative deflector **HS** House Side Shield **PH8**[2,3,4] Photoelectric cell **PH9**[2,3,4] Shorting cap **PHXL**[2,3,4] Photoelectric cell, extended life **RC**[2,3,4] Receptacle 3 pins **RCD**[2,3,4] Receptacle 5 pins **RCD7**[2,3,4] Receptacle 7 pins **SP2** Surge protector	Consult signify.com/outdoorluminaires for details and the complete line of Signify poles and brackets.	**BE2TX** Textured midnight blue **BE6TX** Textured ocean blue **BE8TX** Textured royal blue **BG2TX** Textured Sandstone **BKTX** Textured black **BRTX** Textured bronze **GN4TX** Textured blue green **GN6TX** Textured forest green **GN8TX** Textured Dk forest green **GNTX** Textured green **GR** Gray sandtex **GY3TX** Textured medium grey **NP** Natural aluminum **RD2TX** Textured burgundy **RD4TX** Textured scarlet **TG** Hammer-tone gold **WHTX** Textured white

1. Not available with HS option.
2. **SMA** or **SMB** adaptors is required for this option.
3. Not available with YM adaptor.
4. Luminaire option **RC**, **RCD** or **RCD7** is required with this options.
5. Use of photoelectric cell or shorting cap is required to ensure proper illumination.
6. Only 3 pin receptacle **RC** is available with **SMA** adaptor.

RNS20 Renaissance LED (small)

Urban Luminaire

Features

1. Constructed from top-quality materials, the Contemporary Lantern Series maintains excellent performance in even the most demanding environments.
2. Type LE2, LE3, LE4 and LE5 optic distributions are available to meet a range of lighting applications.
3. Acrylic globe has satin-finish to gently obscure the source without compromising photometry.
4. Tool free access to lamp and electrical components for ease of maintenance.
5. Unique styling merges traditional and contemporary design.

Dimensions

EPA: 1.43 ft² max.
ACDR Weight: 37 lbs (16.8kg) max.
GL Weight: 66 lbs (20.9kg) max.
EPA and weight are calculated without adaptor

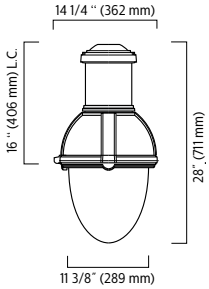

RNS20

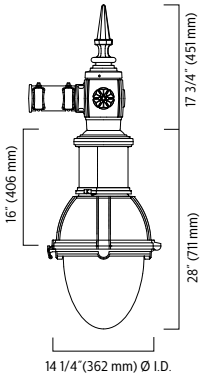

RNS20-SMA

EPA: 2.53 ft² max.
ACDR Weight: 48 lbs (21.8kg) max.
GL Weight: 57 lbs (25.9kg) max.

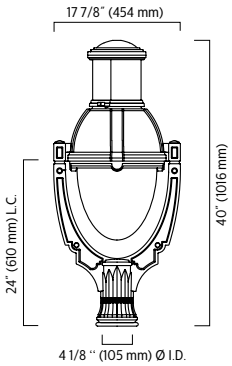

RNS20-YM

Predicted Lumen Depreciation Data

Predicted performance derived from LED manufacturer's data and engineering design estimates, based on IESNA LM-80 methodology. Actual experience may vary due to field application conditions.L_{70} is the predicted time when LED performance depreciates to 70% of initial lumen output. Calculated per IESNA TM21-11. Published L_{70} hours limited to 6 times actual LED test hours.

Ambient Temperature °C	Driver mA	Calculated L_{70} Hours	L_{70} per TM-21	Lumen Maintenance % at 60,000 hrs
35°C	800 mA	>99,000 hours	>60,000 hours	>83%

RNS20 Renaissance LED (small)

Urban Luminaire

LED light engine technical information for RNS20

LED = Lumileds Luxeon T, CRI = 70, CCT = 4000K (3985K +/- 275K or 3710K to 4260K)

System (LED + driver) rated life = 100,000 hrs[1]

LED Module	Typical delivered lumens	Typical system wattage (W)[2]	Typical System Current (A) @				LED current (mA)	HID [3] equivalent	Luminaire Efficacy Rating (Lm/W)	BUG rating
			120V	208V	240V	277V				
24W16LED4K-T-LE2	3040	28	0.25	0.15	0.13	0.12	530	70-100	107	B1-U2-G1
24W16LED4K-T-LE3	3017	28	0.25	0.15	0.13	0.12	530	70-100	106	B1-U2-G1
24W16LED4K-T-LE4	3032	28	0.25	0.15	0.13	0.12	530	70-100	107	B1-U2-G1
24W16LED4K-T-LE5	3050	28	0.25	0.15	0.13	0.12	530	70-100	107	B2-U2-G2
30W16LED4K-T-LE2	3825	37	0.32	0.19	0.17	0.15	700	70-100	103	B1-U2-G1
30W16LED4K-T-LE3	3796	37	0.32	0.19	0.17	0.15	700	70-100	103	B1-U2-G1
30W16LED4K-T-LE4	3815	37	0.32	0.19	0.17	0.15	700	70-100	103	B1-U2-G1
30W16LED4K-T-LE5	3837	37	0.32	0.19	0.17	0.15	700	70-100	104	B3-U3-G3
35W32LED4K-T-LE2	4236	36	0.31	0.19	0.17	0.16	350	70-100	118	B1-U3-G1
35W32LED4K-T-LE3	4175	36	0.31	0.19	0.17	0.16	350	70-100	116	B1-U2-G1
35W32LED4K-T-LE4	4225	36	0.31	0.19	0.17	0.16	350	70-100	117	B1-U2-G1
35W32LED4K-T-LE5	4249	36	0.31	0.19	0.17	0.16	350	70-100	118	B3-U3-G3
55W32LED4K-T-LE2	5945	53	0.47	0.27	0.24	0.22	530	100-150	111	B1-U3-G1
55W32LED4K-T-LE3	5900	53	0.47	0.27	0.24	0.22	530	100-150	110	B1-U3-G2
55W32LED4K-T-LE4	5930	53	0.47	0.27	0.24	0.22	530	100-150	111	B1-U3-G2
55W32LED4K-T-LE5	5994	53	0.47	0.27	0.24	0.22	530	100-150	113	B3-U3-G3

LED light engine technical information for RNS20

LED = Lumileds Luxeon T, CRI = 70, CCT = 3000K (3045K +/- 175K or 2870K to 3220K)

System (LED + driver) rated life = 100,000 hrs[1]

LED Module	Typical delivered lumens	Typical system wattage (W)[2]	Typical System Current (A) @				LED current (mA)	HID [3] equivalent	Luminaire Efficacy Rating (Lm/W)	BUG rating
			120V	208V	240V	277V				
24W16LED3K-T-LE2	2824	28	0.25	0.15	0.13	0.12	530	70-100	100	B1-U2-G1
24W16LED3K-T-LE3	2802	28	0.25	0.15	0.13	0.12	530	70-100	100	B1-U2-G1
24W16LED3K-T-LE4	2817	28	0.25	0.15	0.13	0.12	530	70-100	100	B1-U2-G1
24W16LED3K-T-LE5	2763	28	0.25	0.15	0.13	0.12	530	70-100	98	B2-U2-G2
30W16LED3K-T-LE2	3552	37	0.32	0.19	0.17	0.15	700	70-100	97	B1-U2-G1
30W16LED3K-T-LE3	3525	37	0.32	0.19	0.17	0.15	700	70-100	96	B1-U2-G1
30W16LED3K-T-LE4	3543	37	0.32	0.19	0.17	0.15	700	70-100	96	B1-U2-G1
30W16LED3K-T-LE5	3484	37	0.32	0.19	0.17	0.15	700	70-100	95	B3-U2-G3
35W32LED3K-T-LE2	3907	36	0.31	0.19	0.17	0.16	350	70-100	109	B1-U2-G1
35W32LED3K-T-LE3	3877	36	0.31	0.19	0.17	0.16	350	70-100	108	B1-U2-G1
35W32LED3K-T-LE4	3897	36	0.31	0.19	0.17	0.16	350	70-100	108	B1-U2-G1
35W32LED3K-T-LE5	3939	36	0.31	0.19	0.17	0.16	350	70-100	109	B3-U3-G3
55W32LED3K-T-LE2	5522	53	0.47	0.27	0.24	0.22	530	100-150	103	B1-U3-G1
55W32LED3K-T-LE3	5480	53	0.47	0.27	0.24	0.22	530	100-150	103	B1-U3-G2
55W32LED3K-T-LE4	5508	53	0.47	0.27	0.24	0.22	530	100-150	103	B1-U3-G2
55W32LED3K-T-LE5	5567	53	0.47	0.27	0.24	0.22	530	100-150	104	B3-U3-G3

1. L70 = 70,000 hrs (at ambient temperature = 25°C)
2. System wattage includes the lamp and the LED driver
3. These guidelines show typical replacements for the HID wattage ranges shown. Replacements should always be confirmed with a photometric layout.

Note : Due to rapid and continuous advances in LED technology, LED luminaire data is subject to change without notice and at the discretion of Signify.

RNS20 Renaissance LED (small)

Urban Luminaire

LED light engine technical information for RNS20 Yoke Mount (YM)

LED = Lumileds Luxeon T, CRI = 70, CCT = 4000K (3985K +/- 275K or 3710K to 4260K)
System (LED + driver) rated life = 100,000 hrs[1]

LED Module	Typical delivered lumens	Typical system wattage (W)[2]	Typical System Current (A) @				LED current (mA)	HID [3] equivalent	Luminaire Efficacy Rating (Lm/W)	BUG rating
			120V	208V	240V	277V				
24W16LED4K-T-LE2-YM	2307	28	0.25	0.15	0.13	0.12	530	70-100	82	B1-U2-G1
24W16LED4K-T-LE3-YM	2431	28	0.25	0.15	0.13	0.12	530	70-100	87	B1-U2-G1
24W16LED4K-T-LE4-YM	2540	28	0.25	0.15	0.13	0.12	530	70-100	90	B1-U2-G1
24W16LED4K-T-LE5-YM	2645	28	0.25	0.15	0.13	0.12	530	70-100	94	B2-U2-G2
30W16LED4K-T-LE2-YM	2903	37	0.32	0.19	0.17	0.15	700	70-100	79	B1-U2-G1
30W16LED4K-T-LE3-YM	3059	37	0.32	0.19	0.17	0.15	700	70-100	83	B1-U2-G1
30W16LED4K-T-LE4-YM	3195	37	0.32	0.19	0.17	0.15	700	70-100	87	B1-U2-G1
30W16LED4K-T-LE5-YM	3328	37	0.32	0.19	0.17	0.15	700	70-100	90	B2-U2-G2
35W32LED4K-T-LE2-YM	3215	36	0.31	0.19	0.17	0.16	350	70-100	89	B1-U3-G1
35W32LED4K-T-LE3-YM	3388	36	0.31	0.19	0.17	0.16	350	70-100	94	B1-U2-G1
35W32LED4K-T-LE4-YM	3539	36	0.31	0.19	0.17	0.16	350	70-100	98	B1-U2-G1
35W32LED4K-T-LE5-YM	3686	36	0.31	0.19	0.17	0.16	350	70-100	102	B3-U3-G3
55W32LED4K-T-LE2-YM	4600	53	0.47	0.27	0.24	0.22	530	100-150	86	B1-U3-G1
55W32LED4K-T-LE3-YM	4847	53	0.47	0.27	0.24	0.22	530	100-150	91	B1-U3-G2
55W32LED4K-T-LE4-YM	5063	53	0.47	0.27	0.24	0.22	530	100-150	95	B1-U3-G2
55W32LED4K-T-LE5-YM	5273	53	0.47	0.27	0.24	0.22	530	100-150	99	B3-U3-G3

LED light engine technical information for RNS20 Yoke Mount (YM)

LED = Lumileds Luxeon T, CRI = 70, CCT = 3000K nominal (3045K +/- 175K or 2870K to 3220K)
System (LED + driver) rated life = 100,000 hrs[1]

LED Module	Typical delivered lumens	Typical system wattage (W)[2]	Typical System Current (A) @				LED current (mA)	HID [3] equivalent	Luminaire Efficacy Rating (Lm/W)	BUG rating
			120V	208V	240V	277V				
24W16LED3K-T-LE2-YM	2143	28	0.25	0.15	0.13	0.12	530	70-100	76	B1-U2-G1
24W16LED3K-T-LE3-YM	2258	28	0.25	0.15	0.13	0.12	530	70-100	80	B1-U2-G1
24W16LED3K-T-LE4-YM	2359	28	0.25	0.15	0.13	0.12	530	70-100	84	B1-U2-G1
24W16LED3K-T-LE5-YM	2253	28	0.25	0.15	0.13	0.12	530	70-100	80	B2-U2-G2
30W16LED3K-T-LE2-YM	2696	37	0.32	0.19	0.17	0.15	700	70-100	73	B1-U2-G1
30W16LED3K-T-LE3-YM	2841	37	0.32	0.19	0.17	0.15	700	70-100	77	B1-U2-G1
30W16LED3K-T-LE4-YM	2968	37	0.32	0.19	0.17	0.15	700	70-100	81	B1-U2-G1
30W16LED3K-T-LE5-YM	2835	37	0.32	0.19	0.17	0.15	700	70-100	77	B2-U2-G2
35W32LED3K-T-LE2-YM	2986	36	0.31	0.19	0.17	0.16	350	70-100	83	B1-U3-G1
35W32LED3K-T-LE3-YM	3147	36	0.31	0.19	0.17	0.16	350	70-100	87	B1-U2-G1
35W32LED3K-T-LE4-YM	3287	36	0.31	0.19	0.17	0.16	350	70-100	91	B1-U2-G1
35W32LED3K-T-LE5-YM	3140	36	0.31	0.19	0.17	0.16	350	70-100	87	B3-U3-G3
55W32LED3K-T-LE2-YM	4272	53	0.47	0.27	0.24	0.22	530	100-150	80	B1-U3-G1
55W32LED3K-T-LE3-YM	4502	53	0.47	0.27	0.24	0.22	530	100-150	84	B1-U3-G2
55W32LED3K-T-LE4-YM	4702	53	0.47	0.27	0.24	0.22	530	100-150	88	B1-U3-G2
55W32LED3K-T-LE5-YM	4492	53	0.47	0.27	0.24	0.22	530	100-150	84	B3-U3-G3

1. L70 = 70,000 hrs (at ambient temperature = 25°C)
2. System wattage includes the lamp and the LED driver
3. These guidelines show typical replacements for the HID wattage ranges shown. Replacements should always be confirmed with a photometric layout.

Note : Due to rapid and continuous advances in LED technology, LED luminaire data is subject to change without notice and at the discretion of Signify.

RNS20 Renaissance LED (small)

Urban Luminaire

Specifications:

Hood

Cast 356 aluminum dome, mechanically assembled on the luminaire, c/w a watertight grommet, mechanically assembled to the bracket with four bolts 3/8 16 UNC. This suspension system permits for a full rotation of the luminaire in 90 degree increments.

YM version: Cast 356 aluminum dome, mechanically assembled on the housing.

Housing

In a round shape, this housing is made of injection die cast A380 aluminum, complete with a weatherproof door giving a tool free access to the ballast, mechanically assembled. This suspension system permits for a full rotation of the luminaire in 90 degree increments.

YM version: In a round shape, this housing is made of die cast A380 aluminum, welded to the yoke.

Access-mechanism

A gravity die cast 356 aluminum frame with latch and hinge. The mechanism shall offer tool free access to the inside of the luminaire. An embedded memory retentive gasket shall ensure weatherproofing.

Globe

LEx: Made of one-piece seamless injection-molded (**ACDR**) DR acrylic or (**GL**) clear borosilicate glass globe having an inner prismatic surface. Complete with a semi-prismatic house side shield and external glare softening prisms. The globe is mechanically assembled and sealed onto the lower part of the heat sink.

Light engine

LEDgine composed of 4 main components:
Heat sink / LED module / Optical system / Driver

Electrical components are RoHS compliant.

Heat sink

Made of cast aluminum optimising the LEDs efficiency and life. Product does not use any cooling device with moving parts (only passive cooling device)

LED engine

LED type Lumileds LUXEON T. Composed of high-performance white LEDs. Color temperature as per ANSI/NEMA bin Neutral White, 3000 Kelvin nominal (3045K +/- 175K) or 4000 Kelvin nominal (3985K +/- 275K), CRI 70 Min. 75 Typical.

Optical system

LE2 (type II asymmetrical), **LE3** (type III asymmetrical), **LE4** (type IV asymmetrical) or **LE5** (type V symmetrical) light distributions. Composed of high performance optical grade PMMA acrylic refractor lenses to achieve desired distribution optimized to get maximum spacing, target lumens and a superior lighting uniformity. Optical system is rated IP66. Performance shall be tested per LM 63, LM 79 and TM 15 (IESNA) certifying its photometric performance. Street side indicated.

Prismatic globe: IP66 rated optical system, composed of individual pre-oriented lens to achieve desired distribution, assembled with globe having an inner prismatic surface permanently sealed onto the lower part of the heat sink.

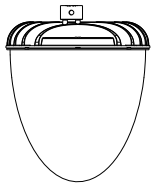

LE2 - Type II (asymmetrical)
LE3 - Type III (asymmetrical)
LE4 - Type IV (asymmetrical)
LE5 - Type V (symmetrical)

Driver

High power factor of 90% minimum. Electronic driver, operating range 50/60 Hz. Auto-adjusting universal voltage input from 120 to 277 VAC rated for both application line to line or line to neutral, Class I, THD of 20% max. Maximum ambient operating temperature from -40F(-40C) to 130F(55C) degrees. Driver comes with dimming compatible 0-10 volts.

The current supplying the LEDs will be reduced by the driver if the driver experiences internal overheating as a protection to the LEDs and the electrical components. Output is protected from short circuits, voltage overload and current overload. Automatic recovery after correction. Standard built-in driver surge protection of 2.5kV (min).

Surge Protector

Surge protector tested in accordance with ANSI/IEEE C62.45 per ANSI/IEEE C62.41.2 Scenario I Category C High Exposure 10kV/10kA waveforms for Line Ground, Line Neutral and Neutral Ground, and in accordance with U.S. DOE (Department of Energy) MSSLC (Municipal Solid State Street Lighting Consortium) model specification for LED roadway luminaires electrical immunity requirements for High Test Level 10kV / 10kA.

Driver options

AST: Pre-set driver for progressive start-up of the LED module(s) to optimize energy management and enhance visual comfort at start-up.

CLO: Pre-set driver to manage the lumen depreciation by adjusting the power given to the LEDs offering the same lighting intensity during the entire lifespan of the LED module.

DMG: Dimmable driver 0-10V.

OTL: Pre-set driver to signal end of life of the LED module(s) for better fixture management.

CDMG: Dynadimmer standard dimming functionalities including pre-programmed scenarios to suit many applications and needs from safety to maximum energy savings.

Order Code	Dimming		
	Scenario	Duration	Level
CDMGS25	Safety	4 hours	25%
CDMGS50	Safety	4 hours	50%
CDMGS75	Safety	4 hours	75%
CDMGM25	Median	6 hours	25%
CDMGM50	Median	6 hours	50%
CDMGM75	Median	6 hours	75%
CDMGE25	Economy	8 hours	25%
CDMGE50	Economy	8 hours	50%
CDMGE75	Economy	8 hours	75%

SRD: Sensor Ready Driver including SR communication (used for dimming and other functionalities), 24V auxiliary supply and a logical signal input (LSI) connected to the top NEMA twist lock receptacle.

SRD1: Sensor Ready Driver including SR communication (used for dimming and other functionalities) but with 24V auxiliary supply and a logical signal input (LSI) not connected to the top NEMA twist lock.

RNS20 Renaissance LED (small)

Urban Luminaire

Specifications (continued)

Luminaire adaptor

MA1: The luminaire is suspended by means of a mounting adaptor with a 1¼" (32mm) NPT threaded hole accepting a threaded tube from the mounting. Retrofit adaptor for existing mounting

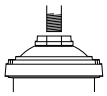

MA2: 1½" (38mm) NPT threaded hole accepting threaded tube from the mounting. Retrofit adaptor for existing mounting.

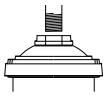

SMA: The luminaire is suspended by means of a decorative side-mounted cast aluminum adaptor. This adaptor accepts tubes from 1⅝" to 2⅜" (41 to 60 mm) and is adjustable to more or less 5°. The adaptor features a cast aluminum decorative cover and finial.

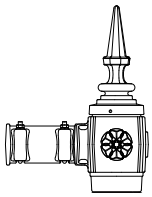

SMB: The luminaire is suspended by means of a decorative side-mounted cast aluminum adaptor. This adaptor accepts tubes from 1⅝" to 2⅜" (41 to 60 mm) and is adjustable to more or less 5°.

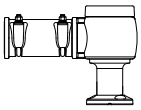

YM: Yoke made of cast 356 aluminum, c/w a fitter to fit over a 4in. (102mm) outside diameter x 4in.(102mm) long tenon, mechanically assembled with 4 set screws 3/8 16 UNC.

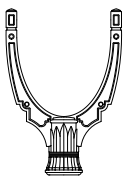

Luminaire options

DE1: Decorative deflector

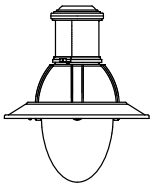

HS: House side shield

RC: Receptacle 3 pins

RCD: Receptacle 5 pins

RCD7: Receptacle 7 pins

SP2: Integral surge protector

Luminaire accessories

PH8: Photoelectric Cell, Twist-lock Type complete with receptacle. Allows a 90 degree rotation.

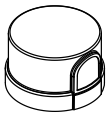

PHXL: Extended life photoelectric cell, Twist-lock Type complete with receptacle. Allows a 90 degree rotation.

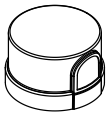

PH9: Shorting cap, Twist-lock Type complete with receptacle.

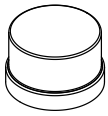

RNS20 Renaissance LED (small)

Urban Luminaire

Specifications (continued)

Finish

The Thermosetting powder coating provided meets the color requirements of the AAMA 2604 specification as measured per ASTM D2244. The Thermosetting product is applied at a dry film of 2.5 to 4.0 mils (64-102 microns) on textured finishes, resulting in a durable long lasting finish.

Finish Options Include:
BE2TX: Textured Midnight Blue
BE6TX: Textured Ocean Blue
BE8TX: Textured Royal Blue
BG2TX: Textured Sandstone
BKTX: Textured Black
BRTX: Textured Bronze
GN4TX: Textured Blue Green
GN6TX: Textured Forest Green
GN8TX: Textured Dark Forest Green
GNTX: Textured Green
GR: Gray Sandtex
GY3TX: Textured Medium Grey
NP: Natural Aluminum
RD2TX: Textured Burgundy
RD4TX: Textured Scarlet
TG: Hammer-tone Gold
WHTX: Textured White

Wiring

Gauge (#14) TEW/AWM 1015 or 1230 wires, 6" (152mm) minimum exceeding from luminaire.

Hardware

All exposed screws shall be complete with Ceramic primer-seal base coat to reduce seizing of the parts and offers a high resistance to corrosion. All seals and sealing devices are made and/or lined with EPDM and/or silicone and/or rubber.

LED products (manufacturing standard)

The electronic components sensitive to electrostatic discharge (ESD) such as light emitting diodes (LEDs) are assembled in compliance with IEC61340 5 1 and ANSI/ESD S20.20 standards so as to eliminate ESD events that could decrease the useful life of the product.

Quality control

Manufactured to ISO 9001 2008 standards and ISO 14001-2004 International Quality Standards Certification.

Vibration resistance

Meets the ANSI C136.31, American National Standard for Roadway Luminaire Vibration specifications for Bridge/overpass applications. (Tested for 1.5G over 100 000 cycles)

Certifications and Compliance

UL8750 and UL1598 compliant. ETL and cETL Listed to U.S. and Canadian safety standards for wet locations. In accordance with applicable ANSI C136 standards. Renaissance LED luminaires are DesignLights Consortium qualified.

©2019 Signify Holding. All rights reserved. This document may be subject to change. No representation or warranty as to the accuracy or completeness of the information included herein is given and any liability for any action in reliance thereon is disclaimed. All trademarks are owned by Signify Holding or their respective owners.

Signify North America Corporation
200 Franklin Square Drive,
Somerset, NJ 08873
Telephone 855-486-2216

Signify Canada Ltd.
281 Hillmount Road,
Markham, ON, Canada L6C 2S3
Telephone 800-668-9008

San Francisco – Lumec RFS (3000K, R2M distribution, 53w, RCD7 control ready, wattage label on box)

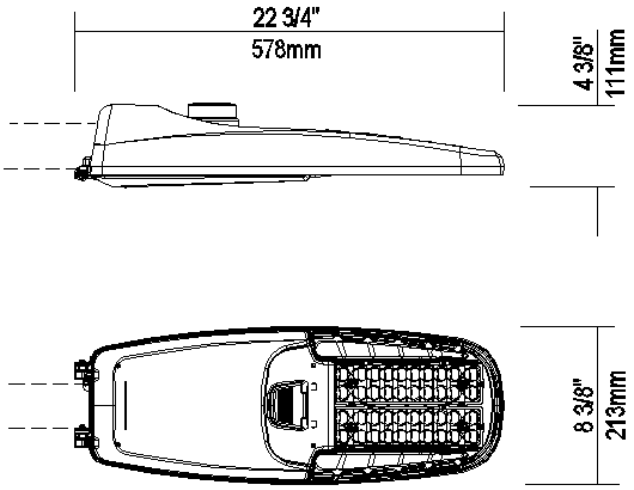

EPA: 0.52 sq ft / weight: 9.4 lb (4.3 kg)
Note: 3D image may not represent color or option selected.
Logos above include link, click to access.

Qty **1** Luminaire **RFS-54W16LED3K-G2-R2M-UNV-DMG-[API-226]-API2011-RCD7-GY3**

Description of Components:

Housing: Made of a low copper die cast Aluminum alloy (A360), 0.100" (2.5mm) minimum thickness. Fits on a 1.66" (42mm) O.D. (1.25" NPS), 1.9" (48mm) O.D. (1.5" NPS) or 2 3/8" (60mm) O.D. (2" NPS) by 5 1/2" (140mm) minimum long tenon. Comes with a zinc plated clamp fixed by 2 zinc plated hexagonal bolts 3/8 16 UNC for ease of installation. Provides an easy step adjustment of +/- 5° tilt in 2.5º increments. Includes integral bubble level standard (always included). A quick release, tool less entry, single latch, hinged, removable door opens downward to provide access to electronic components and to a terminal block. Door is secured to prevent accidental dropping or disengagement. A clearance of 13" (330mm) at the rear is required in order to remove the door. Complete with a bird guard protecting against birds and similar intruders and an ANSI label as per C136.15-2015 to identify wattage and source (both included in box).

Light Engine: Composed of 4 main components: **Heat Sink / LED Module / Optical System / Driver**
Electrical components are RoHS compliant, IP66 sealed light engine.
LEDs tested by ISO 17025-2005 accredited lab in accordance with IESNA LM-80 guidelines, extrapolations in accordance with IESNA TM-21. Metal core board ensures greater heat transfer and longer lifespan.

Heat Sink: Built in the housing, designed to ensure high efficacy and superior cooling by natural vertical convection air flow pattern always close to LEDs and driver optimising their efficiency and life. Product does not use any cooling device with moving parts (only passive cooling). Wide openings enable natural cleaning and removal of dirt and debris. Entire luminaire is rated for operation in ambient temperature of -40°C / -40°F up to +50°C / +122°F.

LED Module: Composed of 16 high-performance white LEDs. Color temperature as per ANSI/NEMA bin Warm White, 3000 Kelvin nominal (3045K +/- 175K or 2870K to 3220K), CRI 70 Min. 75 Typical.

Optical System: (R2M), IES type II medium (asymmetrical). Composed of high-performance UV stabilized optical grade

polymer refractor lenses to achieve desired distribution optimized to get maximum spacing, target lumens and a superior lighting uniformity. System is rated IP66. Performance shall be tested per LM-63, LM-79 and TM-15 (IESNA) certifying its photometric performance.0% uplight and U0 per IESNA TM-15.

Driver: High power factor of 90% min. Electronic driver, operating range 50/60 Hz. Auto-adjusting universal voltage input from 120 to 277 VAC rated for both application line to line or line to neutral, Class 2, THD of 20% max. **Driver comes with dimming compatible 0-10 volts.**

The current supplying the LEDs will be reduced by the driver if the driver experiences internal overheating as a protection to the LEDs and the electrical components. Output is protected from short circuits, voltage overload and current overload. Automatic recovery after correction. Standard built-in driver surge protection of 2.5kV (min).

Driver Options: (DMG) Integrated Feature, Dimming compatible 0-10 volts. For applicable warranty, certification and operation guide see Lumec dimmable luminaire specification document for unapproved device installed by other. To get document, click on this link: Specification document or go on web site on this address: https://www.signify.com/b-dam/signify/en-us/brands/lumec/Lumec-un-approved-control-device-installed-by-others-7_d.pdf

Surge Protector: Integrated Feature, Surge protector tested in accordance with ANSI/IEEE C62.45 per ANSI/IEEE C62.41.2 Scenario I Category C High Exposure 10kV/10kA waveforms for Line-Ground, Line-Neutral and Neutral-Ground, and in accordance with U.S. DOE (Department of Energy) MSSLC (Municipal Solid-State Street Lighting Consortium) model specification for LED roadway luminaires electrical immunity requirements for High Test Level 10kV / 10kA.

Luminaire Options: [API-226] One additional API standard wattage label put on the outside of the packaging box. **(API2011)**, ANSI 2011 standard Pattern Indicator label installed on Luminaire to identify wattage and source. **(RCD7)**, Receptacle with 7 pins enabling dimming and with two extra connections for future use (these connections are capped off at the factory - requires connections to be made in the field), can be used with a twist-lock control device or photoelectric cell or a shorting cap. Use of photocell or shorting cap is required to ensure proper illumination.

Luminaire Useful Life: Refer to IES files for energy consumption and delivered lumens for each option. Based on ISTMT in-situ thermal testing in accordance with UL1598 and UL8750, System Reliability Tool. Advance data and LED manufacturer LM-80/TM-21 data, expected to reach 100,000 + hours with >L70 lumen maintenance @ 25°C. Luminaire Useful Life accounts for LED lumen maintenance AND all of these additional factors including: LED life, driver life, PCB substrate, solder joints, on/off cycles, burning hours and corrosion.

Miscellaneous

Description of Components:

Wiring: The connection of the luminaire is done using a terminal block connector 600V, 85A for use with #2-14 AWG. wires from the primary circuit, located inside the housing. Due to the inrush current that occurs with electronic drivers, recommend using a 10Amp time delay fuse to avoid unwanted fuse blowing (false tripping) that can occur with normal or fast acting fuses.

Hardware: All exposed screws shall be complete with Ceramic primer-seal basecoat to reduce seizing of the parts and offers a high resistance to corrosion. All seals and sealing devices are made and/or lined with EPDM and/or silicone and/or rubber.

Finish: Color to be **medium grey (GY3)** and in accordance with the AAMA 2603 standard. Application of polyester powder coat paint (4 mils/100 microns) with ± 1 mils/24 microns of tolerance. The Thermosetting resins provides a discoloration resistant finish in accordance with the ASTM D2244 standard, as well as luster retention in keeping with the ASTM D523 standard and humidity proof in accordance with the ASTM D2247 standard.

The surface treatment achieves a minimum of 5000 hours for salt spray resistant finish in accordance with testing performed and per ASTM B117 standard.

LED products manufacturing standard: The electronic components sensitive to electrostatic discharge (ESD) such as light emitting diodes (LEDs) are assembled in compliance with IEC61340-5-1 and ANSI/ESD S20.20 standards so as to eliminate ESD events that could decrease the useful life of the product.

Vibration Resistance: The RFS meets the **ANSI C136.31, 2010**, American National Standard for Roadway Luminaire Vibration specifications for Bridge/overpass applications (Tested 3G over 100 000 cycles).

The RFS meets the **California Test 611, Testing durability of mast arm mounted luminaires**, specifications (a 2 000 000 cycles test).

Service Tag: Each individual luminaire is uniquely identifiable, thanks to the Service tag application. With a simple scan of a QR code, placed on the inside of the mast door, you gain instant access to the luminaire configuration, making installation and maintenance operations faster and easier, no matter what stage of the luminaire's lifetime. Just download the APP and register your product right away. For more details visit: Signify.com/servicetag

Warranty: Luminaire comes with a warranty of 10 years on product and finish.

Certifications and Compliance: cULus Listed for Canada and USA. Luminaire meets DOE and MSSLC Model Specification for LED Roadway Luminaires. RoadFocus LED Cobra head luminaires are DesignLights Consortium qualified, consult DLC QPL to confirm your specific fixture selection is approved. Luminaire complies with or exceeds the following ANSI C136 standards: .2, .3, .10, .14, .15, .22, .25, .31, .37, .41.

Web site information details: Click on any specific information details you need: / cULus Certification

LED Wattage values

Ordering Code	Total LEDs	Average System Watts[14]	Wattage label[15]
RFS-15W12LED	12	14	10
RFS-20W12LED	12	19	20
RFS-25W12LED	12	25	20
RFS-25W16LED	16	24	20
RFS-30W16LED	16	29	30
RFS-35W16LED	16	38	40
RFS-45W16LED	16	45	50
RFS-50W16LED	16	50	50
RFS-54W16LED	16	53	50
RFS-60W16LED	16	61	60
RFS-20W20LED	20	20	20
RFS-40W20LED	20	40	40
RFS-65W20LED	20	64	60

Ordering Code	Total LEDs	Average System Watts[14]	Wattage label[15]
RFS-35W32LED	32	37	40
RFS-55W32LED	32	53	50
RFS-60W32LED	32	59	60
RFS-72W32LED	32	73	70
RFS-108W32LED	32	108	110
RFS-35W40LED	40	35	40
RFS-50W40LED	40	49	50
RFS-55W40LED	40	54	50
RFS-65W40LED	40	66	70
RFS-80W40LED	40	79	80
RFS-100W40LED	40	101	100

14. Typical values, rounded.
15. As per ANSI C136.15-2015. Consult factory for other labeling needs.

4000K LED Lumen values

		Type R2M			Type R2S			Type R3M			Type R3S			Type 4			Type 5		
Ordering Code	Color Temp.	Lumen Output	Efficacy (LPW)	BUG Rating	Lumen Output	Efficacy (LPW)	BUG Rating	Lumen Output	Efficacy (LPW)	BUG Rating	Lumen Output	Efficacy (LPW)	BUG Rating	Lumen Output	Efficacy (LPW)	BUG Rating	Lumen Output	Efficacy (LPW)	BUG Rating
RFS-15W12LED	4000	1,863	132	B1-U0-G1	1,940	138	B1-U0-G1	1,858	132	B1-U0-G1	1,882	134	B1-U0-G1	1,849	131	B1-U0-G1	1,924	137	B1-U0-G1
RFS-20W12LED	4000	2,525	130	B1-U0-G1	2,629	136	B1-U0-G1	2,518	130	B1-U0-G1	2,552	132	B1-U0-G1	2,506	129	B1-U0-G1	2,606	134	B1-U0-G1
RFS-25W12LED	4000	2,887	116	B1-U0-G1	3,005	121	B1-U0-G1	2,878	116	B1-U0-G1	2,916	117	B1-U0-G1	2,864	115	B1-U0-G1	2,979	120	B1-U0-G1
RFS-25W16LED	4000	3,323	137	B1-U0-G1	3,458	143	B1-U0-G1	3,312	137	B1-U0-G1	3,357	139	B1-U0-G1	3,296	136	B1-U0-G1	3,429	142	B1-U0-G1
RFS-30W16LED	4000	3,764	130	B1-U0-G1	3,918	136	B1-U0-G1	3,752	130	B1-U0-G1	3,802	132	B1-U0-G1	3,735	129	B1-U0-G1	3,884	135	B1-U0-G1
RFS-35W16LED	4000	4,810	127	B1-U0-G1	5,007	132	B1-U0-G1	4,795	126	B1-U0-G1	4,859	128	B1-U0-G1	4,772	126	B1-U0-G1	4,964	131	B1-U0-G1
RFS-45W16LED	4000	5,497	121	B1-U0-G1	5,722	126	B1-U0-G1	5,480	121	B1-U0-G1	5,554	123	B1-U0-G1	5,454	121	B1-U0-G1	5,673	125	B1-U0-G1
RFS-50W16LED	4000	5,825	116	B2-U0-G1	6,064	121	B2-U0-G1	5,807	116	B2-U0-G1	5,885	117	B2-U0-G1	5,780	115	B2-U0-G1	6,012	120	B2-U0-G1
RFS-54W16LED	4000	6,356	120	B2-U0-G1	6,616	125	B2-U0-G1	6,336	120	B2-U0-G1	6,421	121	B2-U0-G1	6,306	119	B2-U0-G1	6,560	124	B2-U0-G1
RFS-60W16LED	4000	6,929	113	B2-U0-G1	7,213	118	B2-U0-G1	6,907	113	B2-U0-G1	7,000	115	B2-U0-G1	6,875	113	B2-U0-G1	7,151	117	B2-U0-G1
RFS-20W20LED	4000	2,553	130	B1-U0-G1	N/A	N/A	N/A	2,567	131	B1-U0-G1	N/A	N/A	N/A	N/A	N/A	N/A	N/A	N/A	N/A
RFS-40W20LED	4000	5,083	128	B1-U0-G1	N/A	N/A	N/A	5,110	129	B1-U0-G1	N/A	N/A	N/A	N/A	N/A	N/A	N/A	N/A	N/A
RFS-65W20LED	4000	7,827	122	B2-U0-G2	N/A	N/A	N/A	7,869	123	B2-U0-G2	N/A	N/A	N/A	N/A	N/A	N/A	N/A	N/A	N/A
RFS-35W32LED	4000	5,197	141	B1-U0-G1	5,410	146	B1-U0-G1	5,181	140	B1-U0-G1	5,250	142	B1-U0-G1	5,156	139	B1-U0-G1	5,364	145	B1-U0-G1
RFS-55W32LED	4000	7,528	141	B2-U0-G1	7,836	147	B2-U0-G1	7,504	140	B2-U0-G1	7,605	142	B2-U0-G1	7,469	140	B2-U0-G1	7,770	145	B2-U0-G1
RFS-60W32LED	4000	7,630	130	B2-U0-G1	7,943	136	B2-U0-G1	7,607	130	B2-U0-G1	7,709	132	B2-U0-G1	7,571	129	B2-U0-G1	7,875	134	B2-U0-G1
RFS-72W32LED	4000	9,408	129	B2-U0-G2	9,794	134	B2-U0-G2	9,379	128	B2-U0-G2	9,505	130	B2-U0-G2	9,336	128	B2-U0-G2	9,711	133	B2-U0-G2
RFS-108W32LED	4000	13,025	121	B3-U0-G2	13,559	126	B3-U0-G2	12,984	120	B3-U0-G2	13,158	122	B3-U0-G2	12,924	120	B3-U0-G2	13,443	124	B3-U0-G2
RFS-35W40LED	4000	5,472	155	B1-U0-G1	N/A	N/A	N/A	5,502	156	B1-U0-G1	N/A	N/A	N/A	N/A	N/A	N/A	N/A	N/A	N/A
RFS-50W40LED	4000	7,319	150	B2-U0-G2	N/A	N/A	N/A	7,359	151	B2-U0-G2	N/A	N/A	N/A	N/A	N/A	N/A	N/A	N/A	N/A
RFS-55W40LED	4000	7,675	141	B2-U0-G2	N/A	N/A	N/A	7,716	142	B2-U0-G2	N/A	N/A	N/A	N/A	N/A	N/A	N/A	N/A	N/A
RFS-65W40LED	4000	9,024	137	B2-U0-G2	N/A	N/A	N/A	9,073	137	B2-U0-G2	N/A	N/A	N/A	N/A	N/A	N/A	N/A	N/A	N/A
RFS-80W40LED	4000	10,546	133	B2-U0-G2	N/A	N/A	N/A	10,603	134	B2-U0-G2	N/A	N/A	N/A	N/A	N/A	N/A	N/A	N/A	N/A
RFS-100W40LED	4000	12,861	127	B3-U0-G3	N/A	N/A	N/A	12,930	128	B3-U0-G2	N/A	N/A	N/A	N/A	N/A	N/A	N/A	N/A	N/A

Actual performance may vary due to installation variables including optics, mounting/ceiling height, dirt depreciation, light loss factor, etc.; highly recommended to confirm performance with a layout - contact Applications at signify.com/outdoorluminaires. Consult DLC QPL to confirm your specific fixture selection is DLC approved.

Note: Some data may be scaled based on tests of similar but not identical luminaries.

2700K LED Lumen values

		Type R2M			Type R2S			Type R3M			Type R3S			Type 4			Type 5		
Ordering Code	Color Temp.	Lumen Output	Efficacy (LPW)	BUG Rating	Lumen Output	Efficacy (LPW)	BUG Rating	Lumen Output	Efficacy (LPW)	BUG Rating	Lumen Output	Efficacy (LPW)	BUG Rating	Lumen Output	Efficacy (LPW)	BUG Rating	Lumen Output	Efficacy (LPW)	BUG Rating
RFS-15W12LED	2700	1,603	114	B1-U0-G1	1,669	119	B1-U0-G0	1,598	113	B1-U0-G1	1,619	115	B0-U0-G0	1,591	113	B0-U0-G1	1,655	118	B1-U0-G0
RFS-20W12LED	2700	2,172	112	B1-U0-G1	2,261	117	B1-U0-G0	2,166	112	B1-U0-G1	2,195	113	B1-U0-G1	2,156	111	B1-U0-G1	2,242	116	B2-U0-G1
RFS-25W12LED	2700	2,483	100	B1-U0-G1	2,585	104	B1-U0-G0	2,476	99	B1-U0-G1	2,509	101	B1-U0-G1	2,464	99	B1-U0-G1	2,563	103	B2-U0-G1
RFS-25W16LED	2700	2,858	118	B1-U0-G1	2,975	123	B1-U0-G0	2,849	118	B1-U0-G1	2,888	119	B1-U0-G1	2,835	117	B1-U0-G1	2,950	122	B2-U0-G1
RFS-30W16LED	2700	3,238	112	B1-U0-G1	3,371	117	B1-U0-G0	3,228	112	B1-U0-G1	3,271	113	B1-U0-G1	3,213	111	B1-U0-G1	3,342	116	B2-U0-G1
RFS-35W16LED	2700	4,138	109	B1-U0-G1	4,307	113	B1-U0-G1	4,125	109	B1-U0-G1	4,180	110	B1-U0-G1	4,105	108	B1-U0-G1	4,271	112	B3-U0-G1
RFS-45W16LED	2700	4,729	104	B1-U0-G1	4,923	109	B1-U0-G1	4,714	104	B1-U0-G1	4,778	106	B1-U0-G1	4,692	104	B1-U0-G2	4,880	108	B3-U0-G1
RFS-50W16LED	2700	5,012	100	B1-U0-G1	5,217	104	B1-U0-G1	4,996	100	B1-U0-G1	5,063	101	B1-U0-G1	4,972	99	B1-U0-G2	5,172	103	B3-U0-G1
RFS-54W16LED	2700	5,468	103	B2-U0-G1	5,692	107	B2-U0-G1	5,451	103	B1-U0-G1	5,524	104	B1-U0-G1	5,425	102	B1-U0-G2	5,643	106	B3-U0-G1
RFS-60W16LED	2700	5,961	98	B2-U0-G1	6,205	102	B2-U0-G1	5,942	97	B2-U0-G1	6,022	99	B1-U0-G2	5,915	97	B1-U0-G2	6,152	101	B3-U0-G1
RFS-20W20LED	2700	2,218	113	B1-U0-G1	N/A	N/A	N/A	2,230	114	B1-U0-G1	N/A	N/A	N/A	N/A	N/A	N/A	N/A	N/A	N/A
RFS-40W20LED	2700	4,416	111	B1-U0-G1	N/A	N/A	N/A	4,440	112	B1-U0-G1	N/A	N/A	N/A	N/A	N/A	N/A	N/A	N/A	N/A
RFS-65W20LED	2700	6,800	106	B2-U0-G2	N/A	N/A	N/A	6,837	107	B2-U0-G1	N/A	N/A	N/A	N/A	N/A	N/A	N/A	N/A	N/A
RFS-35W32LED	2700	4,470	121	B1-U0-G1	4,654	126	B1-U0-G1	4,457	121	B1-U0-G1	4,516	122	B1-U0-G1	4,436	120	B1-U0-G1	4,614	125	B3-U0-G1
RFS-55W32LED	2700	6,476	121	B2-U0-G1	6,741	126	B2-U0-G1	6,456	121	B2-U0-G1	6,542	122	B1-U0-G2	6,426	120	B1-U0-G2	6,684	125	B3-U0-G1
RFS-60W32LED	2700	6,564	112	B2-U0-G1	6,834	117	B2-U0-G1	6,544	112	B2-U0-G1	6,632	113	B1-U0-G2	6,514	111	B1-U0-G2	6,775	116	B3-U0-G1
RFS-72W32LED	2700	8,094	111	B2-U0-G2	8,426	115	B2-U0-G1	8,069	111	B2-U0-G2	8,177	112	B1-U0-G2	8,031	110	B2-U0-G2	8,354	114	B3-U0-G2
RFS-108W32LED	2700	11,205	104	B3-U0-G2	11,664	108	B3-U0-G2	11,170	103	B2-U0-G2	11,320	105	B2-U0-G2	11,118	103	B2-U0-G2	11,565	107	B4-U0-G2
RFS-35W40LED	2700	4,754	135	B1-U0-G1	N/A	N/A	N/A	4,780	135	B1-U0-G1	N/A	N/A	N/A	N/A	N/A	N/A	N/A	N/A	N/A
RFS-50W40LED	2700	6,359	131	B2-U0-G2	N/A	N/A	N/A	6,393	131	B2-U0-G1	N/A	N/A	N/A	N/A	N/A	N/A	N/A	N/A	N/A
RFS-55W40LED	2700	6,667	123	B2-U0-G2	N/A	N/A	N/A	6,703	123	B2-U0-G1	N/A	N/A	N/A	N/A	N/A	N/A	N/A	N/A	N/A
RFS-65W40LED	2700	7,840	119	B2-U0-G2	N/A	N/A	N/A	7,882	119	B2-U0-G2	N/A	N/A	N/A	N/A	N/A	N/A	N/A	N/A	N/A
RFS-80W40LED	2700	9,162	116	B2-U0-G2	N/A	N/A	N/A	9,211	117	B2-U0-G2	N/A	N/A	N/A	N/A	N/A	N/A	N/A	N/A	N/A
RFS-100W40LED	2700	11,173	111	B2-U0-G2	N/A	N/A	N/A	11,233	111	B2-U0-G2	N/A	N/A	N/A	N/A	N/A	N/A	N/A	N/A	N/A

3000K LED Lumen values

		Type R2M			Type R2S			Type R3M			Type R3S			Type 4			Type 5		
Ordering Code	Color Temp.	Lumen Output	Efficacy (LPW)	BUG Rating	Lumen Output	Efficacy (LPW)	BUG Rating	Lumen Output	Efficacy (LPW)	BUG Rating	Lumen Output	Efficacy (LPW)	BUG Rating	Lumen Output	Efficacy (LPW)	BUG Rating	Lumen Output	Efficacy (LPW)	BUG Rating
RFS-15W12LED	3000	1,748	124	B1-U0-G1	1,820	129	B1-U0-G0	1,743	124	B1-U0-G1	1,766	125	B0-U0-G0	1,735	123	B0-U0-G1	1,805	128	B1-U0-G0
RFS-20W12LED	3000	2,369	122	B1-U0-G1	2,466	127	B1-U0-G0	2,362	122	B1-U0-G1	2,394	123	B1-U0-G1	2,351	121	B1-U0-G1	2,445	126	B2-U0-G1
RFS-25W12LED	3000	2,708	109	B1-U0-G1	2,819	113	B1-U0-G0	2,700	108	B1-U0-G1	2,736	110	B1-U0-G1	2,687	108	B1-U0-G1	2,795	112	B2-U0-G1
RFS-25W16LED	3000	3,117	129	B1-U0-G1	3,244	134	B1-U0-G0	3,107	128	B1-U0-G1	3,149	130	B1-U0-G1	3,092	128	B1-U0-G1	3,217	133	B2-U0-G1
RFS-30W16LED	3000	3,531	122	B1-U0-G1	3,676	127	B1-U0-G0	3,520	122	B1-U0-G1	3,567	124	B1-U0-G1	3,504	121	B1-U0-G1	3,644	126	B2-U0-G1
RFS-35W16LED	3000	4,512	119	B1-U0-G1	4,697	124	B1-U0-G1	4,498	118	B1-U0-G1	4,558	120	B1-U0-G1	4,477	118	B1-U0-G1	4,657	123	B3-U0-G1
RFS-45W16LED	3000	5,157	114	B1-U0-G1	5,368	119	B1-U0-G1	5,141	114	B1-U0-G1	5,210	115	B1-U0-G1	5,117	113	B1-U0-G2	5,322	118	B3-U0-G1
RFS-50W16LED	3000	5,465	109	B1-U0-G1	5,689	113	B1-U0-G1	5,448	109	B1-U0-G1	5,521	110	B1-U0-G1	5,422	108	B1-U0-G2	5,640	112	B3-U0-G1
RFS-54W16LED	3000	5,963	113	B2-U0-G1	6,207	117	B2-U0-G1	5,944	112	B1-U0-G1	6,024	114	B1-U0-G1	5,916	112	B1-U0-G2	6,154	116	B3-U0-G1
RFS-60W16LED	3000	6,500	106	B2-U0-G1	6,767	111	B2-U0-G1	6,480	106	B2-U0-G1	6,567	107	B1-U0-G2	6,450	106	B1-U0-G2	6,709	110	B3-U0-G1
RFS-20W20LED	3000	2,427	124	B1-U0-G1	N/A	N/A	N/A	2,440	124	B1-U0-G1	N/A	N/A	N/A	N/A	N/A	N/A	N/A	N/A	N/A
RFS-40W20LED	3000	4,833	122	B1-U0-G1	N/A	N/A	N/A	4,859	122	B1-U0-G1	N/A	N/A	N/A	N/A	N/A	N/A	N/A	N/A	N/A
RFS-65W20LED	3000	7,442	116	B2-U0-G2	N/A	N/A	N/A	7,482	117	B2-U0-G2	N/A	N/A	N/A	N/A	N/A	N/A	N/A	N/A	N/A
RFS-35W32LED	3000	4,875	132	B1-U0-G1	5,075	137	B1-U0-G1	4,860	131	B1-U0-G1	4,925	133	B1-U0-G1	4,837	131	B1-U0-G1	5,032	136	B3-U0-G1
RFS-55W32LED	3000	7,062	132	B2-U0-G1	7,351	137	B2-U0-G1	7,040	132	B2-U0-G1	7,134	133	B1-U0-G2	7,007	131	B1-U0-G2	7,289	136	B3-U0-G1
RFS-60W32LED	3000	7,158	122	B2-U0-G1	7,452	127	B2-U0-G1	7,136	122	B2-U0-G1	7,232	123	B1-U0-G2	7,103	121	B1-U0-G2	7,388	126	B3-U0-G1
RFS-72W32LED	3000	8,826	121	B2-U0-G2	9,188	126	B2-U0-G1	8,799	121	B2-U0-G2	8,917	122	B1-U0-G2	8,758	120	B2-U0-G2	9,110	125	B3-U0-G2
RFS-108W32LED	3000	12,219	113	B3-U0-G2	12,720	118	B3-U0-G2	12,181	113	B2-U0-G2	12,344	114	B2-U0-G2	12,124	112	B2-U0-G2	12,611	117	B4-U0-G2
RFS-35W40LED	3000	5,203	147	B1-U0-G1	N/A	N/A	N/A	5,231	148	B1-U0-G1	N/A	N/A	N/A	N/A	N/A	N/A	N/A	N/A	N/A
RFS-50W40LED	3000	6,959	143	B2-U0-G2	N/A	N/A	N/A	6,996	144	B2-U0-G1	N/A	N/A	N/A	N/A	N/A	N/A	N/A	N/A	N/A
RFS-55W40LED	3000	7,297	134	B2-U0-G2	N/A	N/A	N/A	7,336	135	B2-U0-G2	N/A	N/A	N/A	N/A	N/A	N/A	N/A	N/A	N/A
RFS-65W40LED	3000	8,580	130	B2-U0-G2	N/A	N/A	N/A	8,626	131	B2-U0-G2	N/A	N/A	N/A	N/A	N/A	N/A	N/A	N/A	N/A
RFS-80W40LED	3000	10,027	127	B2-U0-G2	N/A	N/A	N/A	10,081	128	B2-U0-G2	N/A	N/A	N/A	N/A	N/A	N/A	N/A	N/A	N/A
RFS-100W40LED	3000	12,228	121	B3-U0-G3	N/A	N/A	N/A	12,294	122	B3-U0-G2	N/A	N/A	N/A	N/A	N/A	N/A	N/A	N/A	N/A

Actual performance may vary due to installation variables including optics, mounting/ceiling height, dirt depreciation, light loss factor, etc.; highly recommended to confirm performance with a layout – contact Applications at signify.com/outdoorluminaires. Consult DLC QPL to confirm your specific fixture selection is DLC approved.

Note: Some data may be scaled based on tests of similar but not identical luminaries.

San Francisco - Lumec RFS (3000K, R3M distribution, 73w, RCD7 control ready, wattage label on box)

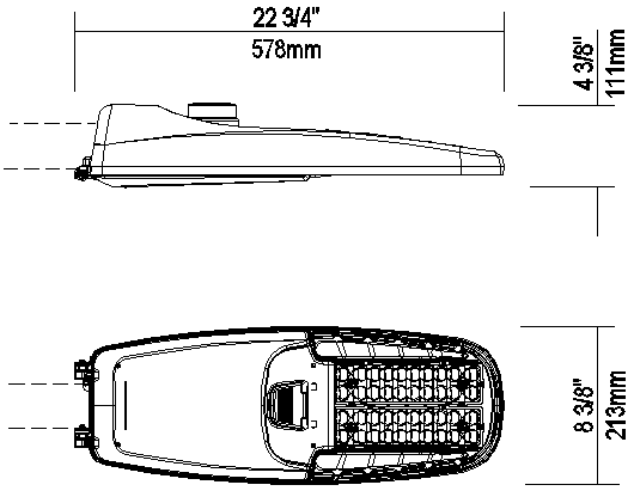

EPA: 0.52 sq ft / weight: 9.4 lb (4.3 kg)
Note: 3D image may not represent color or option selected.
Logos above include link, click to access.

Qty **1** Luminaire **RFS-72W32LED3K-G2-R3M-UNV-DMG-[API-226]-API2011-RCD7-GY3**

Description of Components:

Housing: Made of a low copper die cast Aluminum alloy (A360), 0.100" (2.5mm) minimum thickness. Fits on a 1.66" (42mm) O.D. (1.25" NPS), 1.9" (48mm) O.D. (1.5" NPS) or 2 3/8" (60mm) O.D. (2" NPS) by 5 1/2" (140mm) minimum long tenon. Comes with a zinc plated clamp fixed by 2 zinc plated hexagonal bolts 3/8 16 UNC for ease of installation. Provides an easy step adjustment of +/- 5° tilt in 2.5º increments. Includes integral bubble level standard (always included). A quick release, tool less entry, single latch, hinged, removable door opens downward to provide access to electronic components and to a terminal block. Door is secured to prevent accidental dropping or disengagement. A clearance of 13" (330mm) at the rear is required in order to remove the door. Complete with a bird guard protecting against birds and similar intruders and an ANSI label as per C136.15-2015 to identify wattage and source (both included in box).

Light Engine: Composed of 4 main components: **Heat Sink / LED Module / Optical System / Driver**
Electrical components are RoHS compliant, IP66 sealed light engine.
LEDs tested by ISO 17025-2005 accredited lab in accordance with IESNA LM-80 guidelines, extrapolations in accordance with IESNA TM-21. Metal core board ensures greater heat transfer and longer lifespan.

Heat Sink: Built in the housing, designed to ensure high efficacy and superior cooling by natural vertical convection air flow pattern always close to LEDs and driver optimising their efficiency and life. Product does not use any cooling device with moving parts (only passive cooling). Wide openings enable natural cleaning and removal of dirt and debris. Entire luminaire is rated for operation in ambient temperature of -40°C / -40°F up to +50°C / +122°F.

LED Module: Composed of 32 high-performance white LEDs. Color temperature as per ANSI/NEMA bin Warm White, 3000 Kelvin nominal (3045K +/- 175K or 2870K to 3220K), CRI 70 Min. 75 Typical.

Optical System: (R3M), IES type III medium (asymmetrical). Composed of high-performance UV stabilized optical grade

polymer refractor lenses to achieve desired distribution optimized to get maximum spacing, target lumens and a superior lighting uniformity. System is rated IP66. Performance shall be tested per LM-63, LM-79 and TM-15 (IESNA) certifying its photometric performance.0% uplight and U0 per IESNA TM-15.

Driver: High power factor of 90% min. Electronic driver, operating range 50/60 Hz. Auto-adjusting universal voltage input from 120 to 277 VAC rated for both application line to line or line to neutral, Class 2, THD of 20% max. **Driver comes with dimming compatible 0-10 volts.**

The current supplying the LEDs will be reduced by the driver if the driver experiences internal overheating as a protection to the LEDs and the electrical components. Output is protected from short circuits, voltage overload and current overload. Automatic recovery after correction. Standard built-in driver surge protection of 2.5kV (min).

Driver Options: (DMG) Integrated Feature, Dimming compatible 0-10 volts. For applicable warranty, certification and operation guide see Lumec dimmable luminaire specification document for unapproved device installed by other. To get document, click on this link: Specification document or go on web site on this address: https://www.signify.com/b-dam/signify/en-us/brands/lumec/Lumec-un-approved-control-device-installed-by-others-7_d.pdf

Surge Protector: Integrated Feature, Surge protector tested in accordance with ANSI/IEEE C62.45 per ANSI/IEEE C62.41.2 Scenario I Category C High Exposure 10kV/10kA waveforms for Line-Ground, Line-Neutral and Neutral-Ground, and in accordance with U.S. DOE (Department of Energy) MSSLC (Municipal Solid-State Street Lighting Consortium) model specification for LED roadway luminaires electrical immunity requirements for High Test Level 10kV / 10kA.

Luminaire Options: [API-226] One additional API standard wattage label put on the outside of the packaging box. **(API2011)**, ANSI 2011 standard Pattern Indicator label installed on Luminaire to identify wattage and source. **(RCD7)**, Receptacle with 7 pins enabling dimming and with two extra connections for future use (these connections are capped off at the factory - requires connections to be made in the field), can be used with a twist-lock control device or photoelectric cell or a shorting cap. Use of photocell or shorting cap is required to ensure proper illumination.

Luminaire Useful Life: Refer to IES files for energy consumption and delivered lumens for each option. Based on ISTMT in-situ thermal testing in accordance with UL1598 and UL8750, System Reliability Tool. Advance data and LED manufacturer LM-80/TM-21 data, expected to reach 100,000 + hours with >L70 lumen maintenance @ 25°C. Luminaire Useful Life accounts for LED lumen maintenance AND all of these additional factors including: LED life, driver life, PCB substrate, solder joints, on/off cycles, burning hours and corrosion.

Miscellaneous

Description of Components:

Wiring: The connection of the luminaire is done using a terminal block connector 600V, 85A for use with #2-14 AWG. wires from the primary circuit, located inside the housing. Due to the inrush current that occurs with electronic drivers, recommend using a 10Amp time delay fuse to avoid unwanted fuse blowing (false tripping) that can occur with normal or fast acting fuses.

Hardware: All exposed screws shall be complete with Ceramic primer-seal basecoat to reduce seizing of the parts and offers a high resistance to corrosion. All seals and sealing devices are made and/or lined with EPDM and/or silicone and/or rubber.

Finish: Color to be **medium grey (GY3)** and in accordance with the AAMA 2603 standard. Application of polyester powder coat paint (4 mils/100 microns) with ± 1 mils/24 microns of tolerance. The Thermosetting resins provides a discoloration resistant finish in accordance with the ASTM D2244 standard, as well as luster retention in keeping with the ASTM D523 standard and humidity proof in accordance with the ASTM D2247 standard.

The surface treatment achieves a minimum of 5000 hours for salt spray resistant finish in accordance with testing performed and per ASTM B117 standard.

LED products manufacturing standard: The electronic components sensitive to electrostatic discharge (ESD) such as light emitting diodes (LEDs) are assembled in compliance with IEC61340-5-1 and ANSI/ESD S20.20 standards so as to eliminate ESD events that could decrease the useful life of the product.

Vibration Resistance: The RFS meets the **ANSI C136.31, 2010**, American National Standard for Roadway Luminaire Vibration specifications for Bridge/overpass applications (Tested 3G over 100 000 cycles).

The RFS meets the **California Test 611, Testing durability of mast arm mounted luminaires**, specifications (a 2 000 000 cycles test).

Service Tag: Each individual luminaire is uniquely identifiable, thanks to the Service tag application. With a simple scan of a QR code, placed on the inside of the mast door, you gain instant access to the luminaire configuration, making installation and maintenance operations faster and easier, no matter what stage of the luminaire's lifetime. Just download the APP and register your product right away. For more details visit: Signify.com/servicetag

Warranty: Luminaire comes with a warranty of 10 years on product and finish.

Certifications and Compliance: cULus Listed for Canada and USA. Luminaire meets DOE and MSSLC Model Specification for LED Roadway Luminaires. RoadFocus LED Cobra head luminaires are DesignLights Consortium qualified, consult DLC QPL to confirm your specific fixture selection is approved. Luminaire complies with or exceeds the following ANSI C136 standards: .2, .3, .10, .14, .15, .22, .25, .31, .37, .41.

Web site information details: Click on any specific information details you need: / cULus Certification

LED Wattage values

Ordering Code	Total LEDs	Average System Watts[14]	Wattage label[15]
RFS-15W12LED	12	14	10
RFS-20W12LED	12	19	20
RFS-25W12LED	12	25	20
RFS-25W16LED	16	24	20
RFS-30W16LED	16	29	30
RFS-35W16LED	16	38	40
RFS-45W16LED	16	45	50
RFS-50W16LED	16	50	50
RFS-54W16LED	16	53	50
RFS-60W16LED	16	61	60
RFS-20W20LED	20	20	20
RFS-40W20LED	20	40	40
RFS-65W20LED	20	64	60

Ordering Code	Total LEDs	Average System Watts[14]	Wattage label[15]
RFS-35W32LED	32	37	40
RFS-55W32LED	32	53	50
RFS-60W32LED	32	59	60
RFS-72W32LED	32	73	70
RFS-108W32LED	32	108	110
RFS-35W40LED	40	35	40
RFS-50W40LED	40	49	50
RFS-55W40LED	40	54	50
RFS-65W40LED	40	66	70
RFS-80W40LED	40	79	80
RFS-100W40LED	40	101	100

14. Typical values, rounded.
15. As per ANSI C136.15-2015. Consult factory for other labeling needs.

4000K LED Lumen values

		Type R2M			Type R2S			Type R3M			Type R3S			Type 4			Type 5		
Ordering Code	Color Temp.	Lumen Output	Efficacy (LPW)	BUG Rating	Lumen Output	Efficacy (LPW)	BUG Rating	Lumen Output	Efficacy (LPW)	BUG Rating	Lumen Output	Efficacy (LPW)	BUG Rating	Lumen Output	Efficacy (LPW)	BUG Rating	Lumen Output	Efficacy (LPW)	BUG Rating
RFS-15W12LED	4000	1,863	132	B1-U0-G1	1,940	138	B1-U0-G1	1,858	132	B1-U0-G1	1,882	134	B1-U0-G1	1,849	131	B1-U0-G1	1,924	137	B1-U0-G1
RFS-20W12LED	4000	2,525	130	B1-U0-G1	2,629	136	B1-U0-G1	2,518	130	B1-U0-G1	2,552	132	B1-U0-G1	2,506	129	B1-U0-G1	2,606	134	B1-U0-G1
RFS-25W12LED	4000	2,887	116	B1-U0-G1	3,005	121	B1-U0-G1	2,878	116	B1-U0-G1	2,916	117	B1-U0-G1	2,864	115	B1-U0-G1	2,979	120	B1-U0-G1
RFS-25W16LED	4000	3,323	137	B1-U0-G1	3,458	143	B1-U0-G1	3,312	137	B1-U0-G1	3,357	139	B1-U0-G1	3,296	136	B1-U0-G1	3,429	142	B1-U0-G1
RFS-30W16LED	4000	3,764	130	B1-U0-G1	3,918	136	B1-U0-G1	3,752	130	B1-U0-G1	3,802	132	B1-U0-G1	3,735	129	B1-U0-G1	3,884	135	B1-U0-G1
RFS-35W16LED	4000	4,810	127	B1-U0-G1	5,007	132	B1-U0-G1	4,795	126	B1-U0-G1	4,859	128	B1-U0-G1	4,772	126	B1-U0-G1	4,964	131	B1-U0-G1
RFS-45W16LED	4000	5,497	121	B1-U0-G1	5,722	126	B1-U0-G1	5,480	121	B1-U0-G1	5,554	123	B1-U0-G1	5,454	121	B1-U0-G1	5,673	125	B1-U0-G1
RFS-50W16LED	4000	5,825	116	B2-U0-G1	6,064	121	B2-U0-G1	5,807	116	B2-U0-G1	5,885	117	B2-U0-G1	5,780	115	B2-U0-G1	6,012	120	B2-U0-G1
RFS-54W16LED	4000	6,356	120	B2-U0-G1	6,616	125	B2-U0-G1	6,336	120	B2-U0-G1	6,421	121	B2-U0-G1	6,306	119	B2-U0-G1	6,560	124	B2-U0-G1
RFS-60W16LED	4000	6,929	113	B2-U0-G1	7,213	118	B2-U0-G1	6,907	113	B2-U0-G1	7,000	115	B2-U0-G1	6,875	113	B2-U0-G1	7,151	117	B2-U0-G1
RFS-20W20LED	4000	2,553	130	B1-U0-G1	N/A	N/A	N/A	2,567	131	B1-U0-G1	N/A	N/A	N/A	N/A	N/A	N/A	N/A	N/A	N/A
RFS-40W20LED	4000	5,083	128	B1-U0-G1	N/A	N/A	N/A	5,110	129	B1-U0-G1	N/A	N/A	N/A	N/A	N/A	N/A	N/A	N/A	N/A
RFS-65W20LED	4000	7,827	122	B2-U0-G2	N/A	N/A	N/A	7,869	123	B2-U0-G2	N/A	N/A	N/A	N/A	N/A	N/A	N/A	N/A	N/A
RFS-35W32LED	4000	5,197	141	B1-U0-G1	5,410	146	B1-U0-G1	5,181	140	B1-U0-G1	5,250	142	B1-U0-G1	5,156	139	B1-U0-G1	5,364	145	B1-U0-G1
RFS-55W32LED	4000	7,528	141	B2-U0-G1	7,836	147	B2-U0-G1	7,504	140	B2-U0-G1	7,605	142	B2-U0-G1	7,469	140	B2-U0-G1	7,770	145	B2-U0-G1
RFS-60W32LED	4000	7,630	130	B2-U0-G1	7,943	136	B2-U0-G1	7,607	130	B2-U0-G1	7,709	132	B2-U0-G1	7,571	129	B2-U0-G1	7,875	134	B2-U0-G1
RFS-72W32LED	4000	9,408	129	B2-U0-G2	9,794	134	B2-U0-G2	9,379	128	B2-U0-G2	9,505	130	B2-U0-G2	9,336	128	B2-U0-G2	9,711	133	B2-U0-G2
RFS-108W32LED	4000	13,025	121	B3-U0-G2	13,559	126	B3-U0-G2	12,984	120	B3-U0-G2	13,158	122	B3-U0-G2	12,924	120	B3-U0-G2	13,443	124	B3-U0-G2
RFS-35W40LED	4000	5,472	155	B1-U0-G1	N/A	N/A	N/A	5,502	156	B1-U0-G1	N/A	N/A	N/A	N/A	N/A	N/A	N/A	N/A	N/A
RFS-50W40LED	4000	7,319	150	B2-U0-G2	N/A	N/A	N/A	7,359	151	B2-U0-G2	N/A	N/A	N/A	N/A	N/A	N/A	N/A	N/A	N/A
RFS-55W40LED	4000	7,675	141	B2-U0-G2	N/A	N/A	N/A	7,716	142	B2-U0-G2	N/A	N/A	N/A	N/A	N/A	N/A	N/A	N/A	N/A
RFS-65W40LED	4000	9,024	137	B2-U0-G2	N/A	N/A	N/A	9,073	137	B2-U0-G2	N/A	N/A	N/A	N/A	N/A	N/A	N/A	N/A	N/A
RFS-80W40LED	4000	10,546	133	B2-U0-G2	N/A	N/A	N/A	10,603	134	B2-U0-G2	N/A	N/A	N/A	N/A	N/A	N/A	N/A	N/A	N/A
RFS-100W40LED	4000	12,861	127	B3-U0-G3	N/A	N/A	N/A	12,930	128	B3-U0-G2	N/A	N/A	N/A	N/A	N/A	N/A	N/A	N/A	N/A

Actual performance may vary due to installation variables including optics, mounting/ceiling height, dirt depreciation, light loss factor, etc.; highly recommended to confirm performance with a layout - contact Applications at signify.com/outdoorluminaires. Consult DLC QPL to confirm your specific fixture selection is DLC approved.

Note: Some data may be scaled based on tests of similar but not identical luminaries.

2700K LED Lumen values

		Type R2M			Type R2S			Type R3M			Type R3S			Type 4			Type 5		
Ordering Code	Color Temp.	Lumen Output	Efficacy (LPW)	BUG Rating	Lumen Output	Efficacy (LPW)	BUG Rating	Lumen Output	Efficacy (LPW)	BUG Rating	Lumen Output	Efficacy (LPW)	BUG Rating	Lumen Output	Efficacy (LPW)	BUG Rating	Lumen Output	Efficacy (LPW)	BUG Rating
RFS-15W12LED	2700	1,603	114	B1-U0-G1	1,669	119	B1-U0-G0	1,598	113	B1-U0-G1	1,619	115	B0-U0-G0	1,591	113	B0-U0-G1	1,655	118	B1-U0-G0
RFS-20W12LED	2700	2,172	112	B1-U0-G1	2,261	117	B1-U0-G0	2,166	112	B1-U0-G1	2,195	113	B1-U0-G1	2,156	111	B1-U0-G1	2,242	116	B2-U0-G1
RFS-25W12LED	2700	2,483	100	B1-U0-G1	2,585	104	B1-U0-G0	2,476	99	B1-U0-G1	2,509	101	B1-U0-G1	2,464	99	B1-U0-G1	2,563	103	B2-U0-G1
RFS-25W16LED	2700	2,858	118	B1-U0-G1	2,975	123	B1-U0-G0	2,849	118	B1-U0-G1	2,888	119	B1-U0-G1	2,835	117	B1-U0-G1	2,950	122	B2-U0-G1
RFS-30W16LED	2700	3,238	112	B1-U0-G1	3,371	117	B1-U0-G0	3,228	112	B1-U0-G1	3,271	113	B1-U0-G1	3,213	111	B1-U0-G1	3,342	116	B2-U0-G1
RFS-35W16LED	2700	4,138	109	B1-U0-G1	4,307	113	B1-U0-G1	4,125	109	B1-U0-G1	4,180	110	B1-U0-G1	4,105	108	B1-U0-G1	4,271	112	B3-U0-G1
RFS-45W16LED	2700	4,729	104	B1-U0-G1	4,923	109	B1-U0-G1	4,714	104	B1-U0-G1	4,778	106	B1-U0-G1	4,692	104	B1-U0-G2	4,880	108	B3-U0-G1
RFS-50W16LED	2700	5,012	100	B1-U0-G1	5,217	104	B1-U0-G1	4,996	100	B1-U0-G1	5,063	101	B1-U0-G1	4,972	99	B1-U0-G2	5,172	103	B3-U0-G1
RFS-54W16LED	2700	5,468	103	B2-U0-G1	5,692	107	B2-U0-G1	5,451	103	B1-U0-G1	5,524	104	B1-U0-G1	5,425	102	B1-U0-G2	5,643	106	B3-U0-G1
RFS-60W16LED	2700	5,961	98	B2-U0-G1	6,205	102	B2-U0-G1	5,942	97	B2-U0-G1	6,022	99	B1-U0-G2	5,915	97	B1-U0-G2	6,152	101	B3-U0-G1
RFS-20W20LED	2700	2,218	113	B1-U0-G1	N/A	N/A	N/A	2,230	114	B1-U0-G1	N/A	N/A	N/A	N/A	N/A	N/A	N/A	N/A	N/A
RFS-40W20LED	2700	4,416	111	B1-U0-G1	N/A	N/A	N/A	4,440	112	B1-U0-G1	N/A	N/A	N/A	N/A	N/A	N/A	N/A	N/A	N/A
RFS-65W20LED	2700	6,800	106	B2-U0-G2	N/A	N/A	N/A	6,837	107	B2-U0-G1	N/A	N/A	N/A	N/A	N/A	N/A	N/A	N/A	N/A
RFS-35W32LED	2700	4,470	121	B1-U0-G1	4,654	126	B1-U0-G1	4,457	121	B1-U0-G1	4,516	122	B1-U0-G1	4,436	120	B1-U0-G1	4,614	125	B3-U0-G1
RFS-55W32LED	2700	6,476	121	B2-U0-G1	6,741	126	B2-U0-G1	6,456	121	B2-U0-G1	6,542	122	B1-U0-G2	6,426	120	B1-U0-G2	6,684	125	B3-U0-G1
RFS-60W32LED	2700	6,564	112	B2-U0-G1	6,834	117	B2-U0-G1	6,544	112	B2-U0-G1	6,632	113	B1-U0-G2	6,514	111	B1-U0-G2	6,775	116	B3-U0-G1
RFS-72W32LED	2700	8,094	111	B2-U0-G2	8,426	115	B2-U0-G1	8,069	111	B2-U0-G2	8,177	112	B1-U0-G2	8,031	110	B2-U0-G2	8,354	114	B3-U0-G2
RFS-108W32LED	2700	11,205	104	B3-U0-G2	11,664	108	B3-U0-G2	11,170	103	B2-U0-G2	11,320	105	B2-U0-G2	11,118	103	B2-U0-G2	11,565	107	B4-U0-G2
RFS-35W40LED	2700	4,754	135	B1-U0-G1	N/A	N/A	N/A	4,780	135	B1-U0-G1	N/A	N/A	N/A	N/A	N/A	N/A	N/A	N/A	N/A
RFS-50W40LED	2700	6,359	131	B2-U0-G2	N/A	N/A	N/A	6,393	131	B2-U0-G1	N/A	N/A	N/A	N/A	N/A	N/A	N/A	N/A	N/A
RFS-55W40LED	2700	6,667	123	B2-U0-G2	N/A	N/A	N/A	6,703	123	B2-U0-G1	N/A	N/A	N/A	N/A	N/A	N/A	N/A	N/A	N/A
RFS-65W40LED	2700	7,840	119	B2-U0-G2	N/A	N/A	N/A	7,882	119	B2-U0-G2	N/A	N/A	N/A	N/A	N/A	N/A	N/A	N/A	N/A
RFS-80W40LED	2700	9,162	116	B2-U0-G2	N/A	N/A	N/A	9,211	117	B2-U0-G2	N/A	N/A	N/A	N/A	N/A	N/A	N/A	N/A	N/A
RFS-100W40LED	2700	11,173	111	B2-U0-G2	N/A	N/A	N/A	11,233	111	B2-U0-G2	N/A	N/A	N/A	N/A	N/A	N/A	N/A	N/A	N/A

3000K LED Lumen values

		Type R2M			Type R2S			Type R3M			Type R3S			Type 4			Type 5		
Ordering Code	Color Temp.	Lumen Output	Efficacy (LPW)	BUG Rating	Lumen Output	Efficacy (LPW)	BUG Rating	Lumen Output	Efficacy (LPW)	BUG Rating	Lumen Output	Efficacy (LPW)	BUG Rating	Lumen Output	Efficacy (LPW)	BUG Rating	Lumen Output	Efficacy (LPW)	BUG Rating
RFS-15W12LED	3000	1,748	124	B1-U0-G1	1,820	129	B1-U0-G0	1,743	124	B1-U0-G1	1,766	125	B0-U0-G0	1,735	123	B0-U0-G1	1,805	128	B1-U0-G0
RFS-20W12LED	3000	2,369	122	B1-U0-G1	2,466	127	B1-U0-G0	2,362	122	B1-U0-G1	2,394	123	B1-U0-G1	2,351	121	B1-U0-G1	2,445	126	B2-U0-G1
RFS-25W12LED	3000	2,708	109	B1-U0-G1	2,819	113	B1-U0-G0	2,700	108	B1-U0-G1	2,736	110	B1-U0-G1	2,687	108	B1-U0-G1	2,795	112	B2-U0-G1
RFS-25W16LED	3000	3,117	129	B1-U0-G1	3,244	134	B1-U0-G0	3,107	128	B1-U0-G1	3,149	130	B1-U0-G1	3,092	128	B1-U0-G1	3,217	133	B2-U0-G1
RFS-30W16LED	3000	3,531	122	B1-U0-G1	3,676	127	B1-U0-G0	3,520	122	B1-U0-G1	3,567	124	B1-U0-G1	3,504	121	B1-U0-G1	3,644	126	B2-U0-G1
RFS-35W16LED	3000	4,512	119	B1-U0-G1	4,697	124	B1-U0-G1	4,498	118	B1-U0-G1	4,558	120	B1-U0-G1	4,477	118	B1-U0-G1	4,657	123	B3-U0-G1
RFS-45W16LED	3000	5,157	114	B1-U0-G1	5,368	119	B1-U0-G1	5,141	114	B1-U0-G1	5,210	115	B1-U0-G1	5,117	113	B1-U0-G2	5,322	118	B3-U0-G1
RFS-50W16LED	3000	5,465	109	B1-U0-G1	5,689	113	B1-U0-G1	5,448	109	B1-U0-G1	5,521	110	B1-U0-G1	5,422	108	B1-U0-G2	5,640	112	B3-U0-G1
RFS-54W16LED	3000	5,963	113	B2-U0-G1	6,207	117	B2-U0-G1	5,944	112	B1-U0-G1	6,024	114	B1-U0-G1	5,916	112	B1-U0-G2	6,154	116	B3-U0-G1
RFS-60W16LED	3000	6,500	106	B2-U0-G1	6,767	111	B2-U0-G1	6,480	106	B2-U0-G1	6,567	107	B1-U0-G2	6,450	106	B1-U0-G2	6,709	110	B3-U0-G1
RFS-20W20LED	3000	2,427	124	B1-U0-G1	N/A	N/A	N/A	2,440	124	B1-U0-G1	N/A	N/A	N/A	N/A	N/A	N/A	N/A	N/A	N/A
RFS-40W20LED	3000	4,833	122	B1-U0-G1	N/A	N/A	N/A	4,859	122	B1-U0-G1	N/A	N/A	N/A	N/A	N/A	N/A	N/A	N/A	N/A
RFS-65W20LED	3000	7,442	116	B2-U0-G2	N/A	N/A	N/A	7,482	117	B2-U0-G2	N/A	N/A	N/A	N/A	N/A	N/A	N/A	N/A	N/A
RFS-35W32LED	3000	4,875	132	B1-U0-G1	5,075	137	B1-U0-G1	4,860	131	B1-U0-G1	4,925	133	B1-U0-G1	4,837	131	B1-U0-G1	5,032	136	B3-U0-G1
RFS-55W32LED	3000	7,062	132	B2-U0-G1	7,351	137	B2-U0-G1	7,040	132	B2-U0-G1	7,134	133	B1-U0-G2	7,007	131	B1-U0-G2	7,289	136	B3-U0-G1
RFS-60W32LED	3000	7,158	122	B2-U0-G1	7,452	127	B2-U0-G1	7,136	122	B2-U0-G1	7,232	123	B1-U0-G2	7,103	121	B1-U0-G2	7,388	126	B3-U0-G1
RFS-72W32LED	3000	8,826	121	B2-U0-G2	9,188	126	B2-U0-G1	8,799	121	B2-U0-G2	8,917	122	B1-U0-G2	8,758	120	B2-U0-G2	9,110	125	B3-U0-G2
RFS-108W32LED	3000	12,219	113	B3-U0-G2	12,720	118	B3-U0-G2	12,181	113	B2-U0-G2	12,344	114	B2-U0-G2	12,124	112	B2-U0-G2	12,611	117	B4-U0-G2
RFS-35W40LED	3000	5,203	147	B1-U0-G1	N/A	N/A	N/A	5,231	148	B1-U0-G1	N/A	N/A	N/A	N/A	N/A	N/A	N/A	N/A	N/A
RFS-50W40LED	3000	6,959	143	B2-U0-G2	N/A	N/A	N/A	6,996	144	B2-U0-G1	N/A	N/A	N/A	N/A	N/A	N/A	N/A	N/A	N/A
RFS-55W40LED	3000	7,297	134	B2-U0-G2	N/A	N/A	N/A	7,336	135	B2-U0-G2	N/A	N/A	N/A	N/A	N/A	N/A	N/A	N/A	N/A
RFS-65W40LED	3000	8,580	130	B2-U0-G2	N/A	N/A	N/A	8,626	131	B2-U0-G2	N/A	N/A	N/A	N/A	N/A	N/A	N/A	N/A	N/A
RFS-80W40LED	3000	10,027	127	B2-U0-G2	N/A	N/A	N/A	10,081	128	B2-U0-G2	N/A	N/A	N/A	N/A	N/A	N/A	N/A	N/A	N/A
RFS-100W40LED	3000	12,228	121	B3-U0-G3	N/A	N/A	N/A	12,294	122	B3-U0-G2	N/A	N/A	N/A	N/A	N/A	N/A	N/A	N/A	N/A

Actual performance may vary due to installation variables including optics, mounting/ceiling height, dirt depreciation, light loss factor, etc.; highly recommended to confirm performance with a layout – contact Applications at signify.com/outdoorluminaires. Consult DLC QPL to confirm your specific fixture selection is DLC approved.

Note: Some data may be scaled based on tests of similar but not identical luminaries.

San Francisco - RFM (3000K, R3M distirbution,106w, RCD7 control ready, wattage label on box)

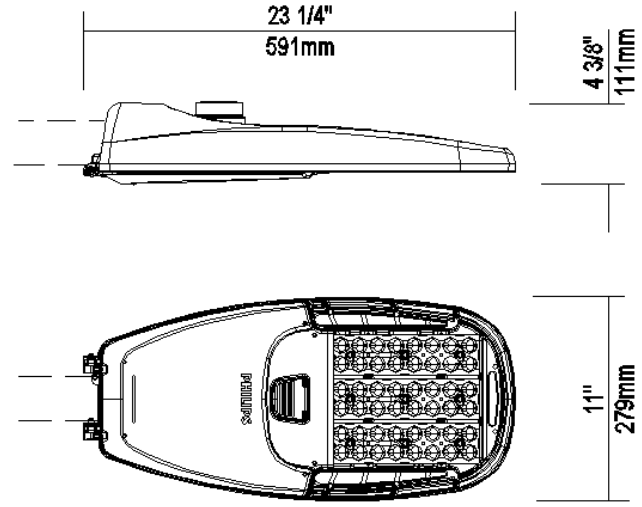

EPA: 0.523 sq ft / weight: 12.3 lb (5.6 kg)
Note: 3D image may not represent color or option selected.
Logos above include link, click to access.

Qty **1** Luminaire **RFM-108W48LED3K-G2-R3M-UNV-DMG-[API-226]-API2011-RCD7-GY3**

Description of Components:

Housing: Made of a low copper die cast Aluminum alloy (A360), 0.100" (2.5mm) minimum thickness. Fits on a 1.66" (42mm) O.D. (1.25" NPS), 1.9" (48mm) O.D. (1.5" NPS) or 2 3/8" (60mm) O.D. (2" NPS) by 5 1/2" (140mm) minimum long tenon. Comes with a zinc plated clamp fixed by 2 zinc plated hexagonal bolts 3/8 16 UNC for ease of installation. Provides an easy step adjustment of +/- 5° tilt in 2.5º increments. Includes integral bubble level standard (always included). A quick release, tool less entry, single latch, hinged, removable door opens downward to provide access to electronic components and to a terminal block. Door is secured to prevent accidental dropping or disengagement. A clearance of 13" (330mm) at the rear is required in order to remove the door. Complete with a bird guard protecting against birds and similar intruders and an ANSI label as per C136.15-2011 to identify wattage and source (both included in box).

Light Engine: Composed of 4 main components: **Heat Sink / LED Module / Optical System / Driver**
Electrical components are RoHS compliant, IP66 sealed light engine.
LEDs tested by ISO 17025-2005 accredited lab in accordance with IESNA LM-80 guidelines, extrapolations in accordance with IESNA TM-21. Metal core board ensures greater heat transfer and longer lifespan.

Heat Sink: Built in the housing, designed to ensure high efficacy and superior cooling by natural vertical convection air flow pattern always close to LEDs and driver optimising their efficiency and life. Product does not use any cooling device with moving parts (only passive cooling). Wide openings enable natural cleaning and removal of dirt and debris. Entire luminaire is rated for operation in ambient temperature of -40°C / -40°F up to +50°C / +122°F.

LED Module: Composed of 48 high-performance white LEDs. Color temperature as per ANSI/NEMA bin Warm White, 3000 Kelvin nominal (3045K +/- 175K or 2870K to 3220K), CRI 70 Min. 75 Typical.

Optical System: (R3M), IES type III medium (asymmetrical). Composed of high-performance UV stabilized optical grade

polymer refractor lenses to achieve desired distribution optimized to get maximum spacing, target lumens and a superior lighting uniformity. System is rated IP66. Performance shall be tested per LM-63, LM-79 and TM-15 (IESNA) certifying its photometric performance.0% uplight and U0 per IESNA TM-15.

Driver: High power factor of 90% minimum. Electronic driver, operating range 50/60 Hz. Auto-adjusting universal voltage input from 120 to 277 VAC rated for both application line to line or line to neutral, Class 1, THD of 20% max. **Driver comes with dimming compatible 0-10 volts.**

The current supplying the LEDs will be reduced by the driver if the driver experiences internal overheating as a protection to the LEDs and the electrical components. Output is protected from short circuits, voltage overload and current overload. Automatic recovery after correction. Standard built-in driver surge protection of 2.5kV (min).

Driver Options: (DMG) Integrated Feature, Dimming compatible 0-10 volts. For applicable warranty, certification and operation guide see Lumec dimmable luminaire specification document for unapproved device installed by other. To get document, click on this link: Specification document or go on web site on this address: https://www.signify.com/b-dam/signify/en-us/brands/lumec/Lumec-un-approved-control-device-installed-by-others-7_d.pdf

Surge Protector: Integrated Feature, Surge protector tested in accordance with ANSI/IEEE C62.45 per ANSI/IEEE C62.41.2 Scenario I Category C High Exposure 10kV/10kA waveforms for Line-Ground, Line-Neutral and Neutral-Ground, and in accordance with U.S. DOE (Department of Energy) MSSLC (Municipal Solid-State Street Lighting Consortium) model specification for LED roadway luminaires electrical immunity requirements for High Test Level 10kV / 10kA.

Luminaire Options: [API-226] One additional API standard wattage label put on the outside of the packaging box. **(API2011)**, ANSI 2011 standard Pattern Indicator label installed on Luminaire to identify wattage and source. **(RCD7)**, Receptacle with 7 pins enabling dimming and with two extra connections for future use (these connections are capped off at the factory - requires connections to be made in the field), can be used with a twist-lock control device or photoelectric cell or a shorting cap. Use of photocell or shorting cap is required to ensure proper illumination.

Luminaire Useful Life: Refer to IES files for energy consumption and delivered lumens for each option. Based on ISTMT in-situ thermal testing in accordance with UL1598 and UL8750, System Reliability Tool. Advance data and LED manufacturer LM-80/TM-21 data, expected to reach 100,000 + hours with >L70 lumen maintenance @ 25°C. Luminaire Useful Life accounts for LED lumen maintenance AND all of these additional factors including: LED life, driver life, PCB substrate, solder joints, on/off cycles, burning hours and corrosion.

Miscellaneous

Description of Components:

Wiring: The connection of the luminaire is done using a terminal block connector 600V, 85A for use with #2-14 AWG. wires from the primary circuit, located inside the housing. Due to the inrush current that occurs with electronic drivers, recommend using a 10Amp time delay fuse to avoid unwanted fuse blowing (false tripping) that can occur with normal or fast acting fuses.

Hardware: All exposed screws shall be complete with Ceramic primer-seal basecoat to reduce seizing of the parts and offers a high resistance to corrosion. All seals and sealing devices are made and/or lined with EPDM and/or silicone and/or rubber.

Finish: Color to be **medium grey (GY3)** and in accordance with the AAMA 2603 standard. Application of polyester powder coat paint (4 mils/100 microns) with ± 1 mils/24 microns of tolerance. The Thermosetting resins provides a discoloration resistant finish in accordance with the ASTM D2244 standard, as well as luster retention in keeping with the ASTM D523 standard and humidity proof in accordance with the ASTM D2247 standard.

The surface treatment achieves a minimum of 5000 hours for salt spray resistant finish in accordance with testing performed and per ASTM B117 standard.

LED products manufacturing standard: The electronic components sensitive to electrostatic discharge (ESD) such as light emitting diodes (LEDs) are assembled in compliance with IEC61340-5-1 and ANSI/ESD S20.20 standards so as to eliminate ESD events that could decrease the useful life of the product.

Vibration Resistance: The RFM meets the **ANSI C136.31, 2010**, American National Standard for Roadway Luminaire Vibration specifications for Bridge/overpass applications (Tested 3G over 100 000 cycles).

The RFM meets the **California Test 611, Testing durability of mast arm mounted luminaires**, specifications (a 2 000 000 cycles test).

Service Tag: Each individual luminaire is uniquely identifiable, thanks to the Service tag application. With a simple scan of a QR code, placed on the inside of the mast door, you gain instant access to the luminaire configuration, making installation and maintenance operations faster and easier, no matter what stage of the luminaire's lifetime. Just download the APP and register your product right away. For more details visit: Signify.com/servicetag

Warranty: Luminaire comes with a warranty of 10 years on product and finish.

Certifications and Compliance: cULus Listed for Canada and USA. Luminaire meets DOE and MSSLC Model Specification for LED Roadway Luminaires. RoadFocus LED Cobra head luminaires are DesignLights Consortium qualified, consult DLC QPL to confirm your specific fixture selection is approved. Luminaire complies with or exceeds the following ANSI C136 standards: .2, .3, .10, .14, .15, .22, .25, .31, .37, .41.

Web site information details: Click on any specific information details you need: / cULus Certification

LED Wattage values

Ordering Code	Total LEDs	Average System Watts[15]	Wattage label[16]
RFM-130W32LED	32	129	130
RFM-135W40LED	40	135	140
RFM-55W48LED	48	55	60
RFM-80W48LED	48	81	80
RFM-108W48LED	48	106	110
RFM-160W48LED	48	161	160
RFM-50W60LED	60	52	50
RFM-75W60LED	60	77	80
RFM-100W60LED	60	99	100
RFM-120W60LED	60	122	120
RFM-150W60LED	60	149	150
RFM-170W60LED	60	170	170

15. Typical values, rounded.
16. As per ANSI C136.15-2015. Consult factory for other labeling needs.

4000K LED Lumen values

		Type R2M			Type R2S			Type R3M			Type R3S			Type 4			Type 5		
Ordering Code	Color Temp.	Lumen Output	Efficacy (LPW)	BUG Rating	Lumen Output	Efficacy (LPW)	BUG Rating	Lumen Output	Efficacy (LPW)	BUG Rating	Lumen Output	Efficacy (LPW)	BUG Rating	Lumen Output	Efficacy (LPW)	BUG Rating	Lumen Output	Efficacy (LPW)	BUG Rating
RFM-130W32LED	4000	14,913	116	B3-U0-G2	15,633	121	B3-U0-G2	14,971	116	B3-U0-G2	15,172	118	B2-U0-G2	14,901	116	B2-U0-G3	15,500	120	B4-U0-G2
RFM-135W40LED	4000	15,954	118	B3-U0-G3	N/A	N/A	N/A	16,040	119	B3-U0-G3	N/A	N/A	N/A	N/A	N/A	N/A	N/A	N/A	N/A
RFM-55W48LED	4000	7,747	141	B2-U0-G1	8,123	147	B2-U0-G1	7,778	141	B2-U0-G1	7,883	143	B1-U0-G2	7,742	141	B1-U0-G2	8,053	146	B3-U0-G1
RFM-80W48LED	4000	11,109	138	B2-U0-G2	11,647	145	B2-U0-G2	11,153	138	B2-U0-G2	11,302	140	B2-U0-G2	11,101	138	B2-U0-G2	11,546	143	B4-U0-G2
RFM-108W48LED	4000	14,024	132	B3-U0-G2	14,702	139	B3-U0-G2	14,079	133	B3-U0-G2	14,268	135	B2-U0-G2	14,013	132	B2-U0-G2	14,576	138	B4-U0-G2
RFM-160W48LED	4000	19,412	121	B3-U0-G3	20,351	127	B3-U0-G2	19,489	121	B3-U0-G3	19,750	123	B2-U0-G3	19,397	121	B3-U0-G3	20,176	126	B4-U0-G2
RFM-50W60LED	4000	8,038	154	B2-U0-G2	N/A	N/A	N/A	8,081	155	B2-U0-G2	N/A	N/A	N/A	N/A	N/A	N/A	N/A	N/A	N/A
RFM-75W60LED	4000	10,979	143	B2-U0-G2	N/A	N/A	N/A	11,038	143	B2-U0-G2	N/A	N/A	N/A	N/A	N/A	N/A	N/A	N/A	N/A
RFM-100W60LED	4000	13,615	138	B3-U0-G3	N/A	N/A	N/A	13,688	138	B3-U0-G2	N/A	N/A	N/A	N/A	N/A	N/A	N/A	N/A	N/A
RFM-120W60LED	4000	16,094	132	B3-U0-G3	N/A	N/A	N/A	16,181	133	B3-U0-G3	N/A	N/A	N/A	N/A	N/A	N/A	N/A	N/A	N/A
RFM-150W60LED	4000	19,078	128	B3-U0-G3	N/A	N/A	N/A	19,180	129	B3-U0-G3	N/A	N/A	N/A	N/A	N/A	N/A	N/A	N/A	N/A
RFM-170W60LED	4000	21,037	124	B3-U0-G3	N/A	N/A	N/A	21,150	124	B3-U0-G3	N/A	N/A	N/A	N/A	N/A	N/A	N/A	N/A	N/A

3000K LED Lumen values

		Type R2M			Type R2S			Type R3M			Type R3S			Type 4			Type 5		
Ordering Code	Color Temp.	Lumen Output	Efficacy (LPW)	BUG Rating	Lumen Output	Efficacy (LPW)	BUG Rating	Lumen Output	Efficacy (LPW)	BUG Rating	Lumen Output	Efficacy (LPW)	BUG Rating	Lumen Output	Efficacy (LPW)	BUG Rating	Lumen Output	Efficacy (LPW)	BUG Rating
RFM-130W32LED	3000	13,990	109	B3-U0-G2	14,666	114	B3-U0-G2	14,045	109	B3-U0-G2	14,233	111	B2-U0-G2	13,979	109	B2-U0-G3	14,541	113	B4-U0-G2
RFM-135W40LED	3000	15,169	112	B3-U0-G3	N/A	N/A	N/A	15,251	113	B3-U0-G3	N/A	N/A	N/A	N/A	N/A	N/A	N/A	N/A	N/A
RFM-55W48LED	3000	7,268	132	B2-U0-G1	7,620	138	B2-U0-G1	7,297	132	B2-U0-G1	7,395	134	B1-U0-G2	7,263	132	B1-U0-G2	7,555	137	B3-U0-G1
RFM-80W48LED	3000	10,422	129	B2-U0-G2	10,926	136	B2-U0-G2	10,463	130	B2-U0-G2	10,603	132	B2-U0-G2	10,414	129	B2-U0-G2	10,832	134	B4-U0-G2
RFM-108W48LED	3000	13,156	124	B3-U0-G2	13,792	130	B3-U0-G2	13,208	125	B3-U0-G2	13,385	126	B2-U0-G2	13,146	124	B2-U0-G2	13,674	129	B4-U0-G2
RFM-160W48LED	3000	18,211	113	B3-U0-G3	19,092	119	B3-U0-G2	18,283	114	B3-U0-G3	18,528	115	B2-U0-G3	18,197	113	B3-U0-G3	18,928	118	B4-U0-G2
RFM-50W60LED	3000	7,643	146	B2-U0-G2	N/A	N/A	N/A	7,684	147	B2-U0-G2	N/A	N/A	N/A	N/A	N/A	N/A	N/A	N/A	N/A
RFM-75W60LED	3000	10,439	136	B2-U0-G2	N/A	N/A	N/A	10,495	136	B2-U0-G2	N/A	N/A	N/A	N/A	N/A	N/A	N/A	N/A	N/A
RFM-100W60LED	3000	12,945	131	B3-U0-G2	N/A	N/A	N/A	13,015	131	B3-U0-G2	N/A	N/A	N/A	N/A	N/A	N/A	N/A	N/A	N/A
RFM-120W60LED	3000	15,302	125	B3-U0-G3	N/A	N/A	N/A	15,384	126	B3-U0-G3	N/A	N/A	N/A	N/A	N/A	N/A	N/A	N/A	N/A
RFM-150W60LED	3000	18,139	122	B3-U0-G3	N/A	N/A	N/A	18,237	122	B3-U0-G3	N/A	N/A	N/A	N/A	N/A	N/A	N/A	N/A	N/A
RFM-170W60LED	3000	20,002	118	B3-U0-G3	N/A	N/A	N/A	20,110	118	B3-U0-G3	N/A	N/A	N/A	N/A	N/A	N/A	N/A	N/A	N/A

Actual performance may vary due to installation variables including optics, mounting/ceiling height, dirt depreciation, light loss factor, etc.; highly recommended to confirm performance with a layout - contact Applications at signify.com/outdoorluminaires. Consult DLC QPL to confirm your specific fixture selection is DLC approved.

Note: Some data may be scaled based on tests of similar but not identical luminaries.

LED Wattage values

Ordering Code	Total LEDs	Average System Watts[15]	Wattage label[16]
RFM-130W32LED	32	129	130
RFM-135W40LED	40	135	140
RFM-55W48LED	48	55	60
RFM-80W48LED	48	81	80
RFM-108W48LED	48	106	110
RFM-160W48LED	48	161	160
RFM-50W60LED	60	52	50
RFM-75W60LED	60	77	80
RFM-100W60LED	60	99	100
RFM-120W60LED	60	122	120
RFM-150W60LED	60	149	150
RFM-170W60LED	60	170	170

15. Typical values, rounded.
16. As per ANSI C136.15-2015. Consult factory for other labeling needs.

2700K LED Lumen values

		Type R2M			Type R2S			Type R3M			Type R3S			Type 4			Type 5		
Ordering Code	Color Temp.	Lumen Output	Efficacy (LPW)	BUG Rating	Lumen Output	Efficacy (LPW)	BUG Rating	Lumen Output	Efficacy (LPW)	BUG Rating	Lumen Output	Efficacy (LPW)	BUG Rating	Lumen Output	Efficacy (LPW)	BUG Rating	Lumen Output	Efficacy (LPW)	BUG Rating
RFM-130W32LED	2700	12,829	100	B3-U0-G2	13,449	104	B3-U0-G2	14,045	109	B3-U0-G2	13,052	109	B2-U0-G2	12,819	100	B2-U0-G3	13,334	104	B4-U0-G2
RFM-135W40LED	2700	13,860	103	B3-U0-G3	N/A	N/A	N/A	13,935	103	B3-U0-G2	N/A	N/A	N/A	N/A	N/A	N/A	N/A	N/A	N/A
RFM-55W48LED	2700	6,665	121	B2-U0-G1	6,988	127	B2-U0-G1	7,297	132	B2-U0-G1	6,781	132	B1-U0-G2	6,660	121	B1-U0-G2	6,928	126	B3-U0-G1
RFM-80W48LED	2700	9,557	119	B2-U0-G2	10,019	124	B2-U0-G2	10,560	131	B2-U0-G2	9,723	131	B2-U0-G2	9,550	119	B2-U0-G2	9,933	123	B4-U0-G2
RFM-108W48LED	2700	12,064	114	B3-U0-G2	12,648	119	B3-U0-G2	13,208	125	B3-U0-G2	12,274	125	B2-U0-G2	12,055	114	B2-U0-G2	12,539	118	B4-U0-G2
RFM-160W48LED	2700	16,700	104	B3-U0-G3	17,508	109	B3-U0-G2	18,283	114	B3-U0-G3	16,991	114	B2-U0-G3	16,687	104	B3-U0-G3	17,357	108	B4-U0-G2
RFM-50W60LED	2700	6,983	134	B2-U0-G2	N/A	N/A	N/A	7,021	134	B2-U0-G1	N/A	N/A	N/A	N/A	N/A	N/A	N/A	N/A	N/A
RFM-75W60LED	2700	9,538	124	B2-U0-G2	N/A	N/A	N/A	9,589	125	B2-U0-G2	N/A	N/A	N/A	N/A	N/A	N/A	N/A	N/A	N/A
RFM-100W60LED	2700	11,828	119	B2-U0-G2	N/A	N/A	N/A	11,892	120	B2-U0-G2	N/A	N/A	N/A	N/A	N/A	N/A	N/A	N/A	N/A
RFM-120W60LED	2700	13,982	115	B3-U0-G3	N/A	N/A	N/A	14,057	115	B3-U0-G2	N/A	N/A	N/A	N/A	N/A	N/A	N/A	N/A	N/A
RFM-150W60LED	2700	16,574	111	B3-U0-G3	N/A	N/A	N/A	16,663	112	B3-U0-G3	N/A	N/A	N/A	N/A	N/A	N/A	N/A	N/A	N/A
RFM-170W60LED	2700	18,276	108	B3-U0-G3	N/A	N/A	N/A	18,374	108	B3-U0-G3	N/A	N/A	N/A	N/A	N/A	N/A	N/A	N/A	N/A

Actual performance may vary due to installation variables including optics, mounting/ceiling height, dirt depreciation, light loss factor, etc.; highly recommended to confirm performance with a layout – contact Applications at signify.com/outdoorluminaires. Consult DLC QPL to confirm your specific fixture selection is DLC approved.

Note: Some data may be scaled based on tests of similar but not identical luminaries.

San Francisco – RFL (3000K, R3M distribution, 137w, RCD7 control ready, wattage label on box)

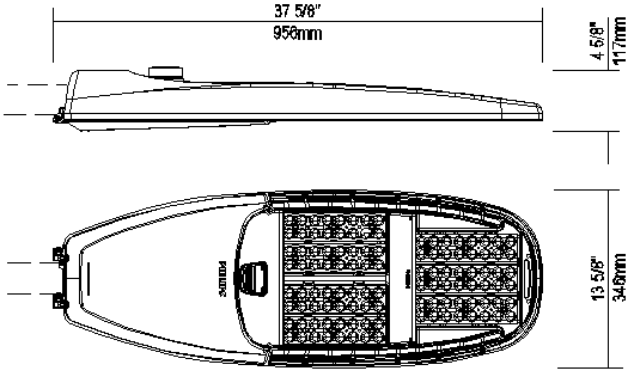

EPA: 0.92 sq ft / weight: 27.3 lb (12.4 kg)
Note: 3D image may not represent color or option selected.
Logos above include link, click to access.

Qty **1** Luminaire **RFL-145W64LED3K-G2-R3M-UNV-DMG-[API-226]-API2011-RCD7-GY3**

Description of Components:

Housing: Made of a low copper die cast Aluminum alloy (A360), 0.100" (2.5mm) minimum thickness. Fits on a 1.66" (42mm) O.D. (1.25" NPS), 1.9" (48mm) O.D. (1.5" NPS) or 2 3/8" (60mm) O.D. (2" NPS) by 7" (178mm) minimum long tenon. Comes with 2 zinc plated clamp fixed by 4 zinc plated hexagonal bolts 3/8 16 UNC for ease of installation. Provides an easy step adjustment of +/- 5° tilt in 2.5º increments. A quick release, tool less entry, hinged, removable door opens downward to provide access to electronic components and to a terminal block. Door is secured to prevent accidental dropping or disengagement. A clearance of 17" (432mm) at the rear is required in order to remove the door. Complete with a bird guard protecting against birds and similar intruders and an ANSI label as per C136.15-2011 to identify wattage and source (both included in box).

Light Engine: Composed of 4 main components: **Heat Sink / LED Module / Optical System / Driver**
Electrical components are RoHS compliant, IP66 sealed light engine.
LEDs tested by ISO 17025-2005 accredited lab in accordance with IESNA LM-80 guidelines, extrapolations in accordance with IESNA TM-21. Metal core board ensures greater heat transfer and longer lifespan.

Heat Sink: Built in the housing, designed to ensure high efficacy and superior cooling by natural vertical convection air flow pattern always close to LEDs and driver optimising their efficiency and life. Product does not use any cooling device with moving parts (only passive cooling). Wide openings enable natural cleaning and removal of dirt and debris. Entire luminaire is rated for operation in ambient temperature of -40°C / -40°F up to +50°C / +122°F.

LED Module: Composed of 64 high-performance white LEDs. Color temperature as per ANSI/NEMA bin Warm White, 3000 Kelvin nominal (3045K +/- 175K or 2870K to 3220K), CRI 70 Min. 75 Typical.

Optical System: (R3M), IES type III medium (asymmetrical). Composed of high-performance UV stabilized optical grade

polymer refractor lenses to achieve desired distribution optimized to get maximum spacing, target lumens and a superior lighting uniformity. System is rated IP66. Performance shall be tested per LM-63, LM-79 and TM-15 (IESNA) certifying its photometric performance.0% uplight and U0 per IESNA TM-15.

Driver: High power factor of 90% minimum. Electronic driver, operating range 50/60 Hz. Auto-adjusting universal voltage input from 120 to 277 VAC rated for both application line to line or line to neutral, Class 1, THD of 20% max. **Driver comes with dimming compatible 0-10 volts.**

The current supplying the LEDs will be reduced by the driver if the driver experiences internal overheating as a protection to the LEDs and the electrical components. Output is protected from short circuits, voltage overload and current overload. Automatic recovery after correction. Standard built-in driver surge protection of 2.5kV (min).

Driver Options: (DMG) Integrated Feature, Dimming compatible 0-10 volts. For applicable warranty, certification and operation guide see Lumec dimmable luminaire specification document for unapproved device installed by other. To get document, click on this link: Specification document or go on web site on this address: https://www.signify.com/b-dam/signify/en-us/brands/lumec/Lumec-un-approved-control-device-installed-by-others-7_d.pdf

Surge Protector: Integrated Feature, Surge protector tested in accordance with ANSI/IEEE C62.45 per ANSI/IEEE C62.41.2 Scenario I Category C High Exposure 10kV/10kA waveforms for Line-Ground, Line-Neutral and Neutral-Ground, and in accordance with U.S. DOE (Department of Energy) MSSLC (Municipal Solid-State Street Lighting Consortium) model specification for LED roadway luminaires electrical immunity requirements for High Test Level 10kV / 10kA.

Luminaire Options: [API-226] One additional API standard wattage label put on the outside of the packaging box. **(API2011)**, ANSI 2011 standard Pattern Indicator label installed on Luminaire to identify wattage and source. **(RCD7)**, Receptacle with 7 pins enabling dimming and with two extra connections for future use (these connections are capped off at the factory - requires connections to be made in the field), can be used with a twist-lock control device or photoelectric cell or a shorting cap. Use of photocell or shorting cap is required to ensure proper illumination.

Luminaire Useful Life: Refer to IES files for energy consumption and delivered lumens for each option. Based on ISTMT in-situ thermal testing in accordance with UL1598 and UL8750, System Reliability Tool. Advance data and LED manufacturer LM-80/TM-21 data, expected to reach 100,000 + hours with >L70 lumen maintenance @ 25°C. Luminaire Useful Life accounts for LED lumen maintenance AND all of these additional factors including: LED life, driver life, PCB substrate, solder joints, on/off cycles, burning hours and corrosion.

Miscellaneous

Description of Components:

Wiring: The connection of the luminaire is done using a terminal block connector 600V, 85A for use with #2-14 AWG. wires from the primary circuit, located inside the housing. Due to the inrush current that occurs with electronic drivers, recommend using a 10Amp time delay fuse to avoid unwanted fuse blowing (false tripping) that can occur with normal or fast acting fuses.

Hardware: All exposed screws shall be complete with Ceramic primer-seal basecoat to reduce seizing of the parts and offers a high resistance to corrosion. All seals and sealing devices are made and/or lined with EPDM and/or silicone and/or rubber.

Finish: Color to be **medium grey (GY3)** and in accordance with the AAMA 2603 standard. Application of polyester powder coat paint (4 mils/100 microns) with ± 1 mils/24 microns of tolerance. The Thermosetting resins provides a discoloration resistant finish in accordance with the ASTM D2244 standard, as well as luster retention in keeping with the ASTM D523 standard and humidity proof in accordance with the ASTM D2247 standard.

The surface treatment achieves a minimum of 5000 hours for salt spray resistant finish in accordance with testing performed and per ASTM B117 standard.

LED products manufacturing standard: The electronic components sensitive to electrostatic discharge (ESD) such as light emitting diodes (LEDs) are assembled in compliance with IEC61340-5-1 and ANSI/ESD S20.20 standards so as to eliminate ESD events that could decrease the useful life of the product.

Vibration Resistance: The RFL meets the **ANSI C136.31, 2010**, American National Standard for Roadway Luminaire Vibration specifications for Bridge/overpass applications (Tested 3G over 100 000 cycles).

The RFL meets the **California Test 611, Testing durability of mast arm mounted luminaires**, specifications (a 2 000 000 cycles test).

Service Tag: Each individual luminaire is uniquely identifiable, thanks to the Service tag application. With a simple scan of a QR code, placed on the inside of the mast door, you gain instant access to the luminaire configuration, making installation and maintenance operations faster and easier, no matter what stage of the luminaire's lifetime. Just download the APP and register your product right away. For more details visit: Signify.com/servicetag

Warranty: Luminaire comes with a warranty of 10 years on product and finish.

Certifications and Compliance: cULus Listed for Canada and USA. Luminaire meets DOE and MSSLC Model Specification for LED Roadway Luminaires. RoadFocus LED Cobra head luminaires are DesignLights Consortium qualified, consult DLC QPL to confirm your specific fixture selection is approved. Luminaire complies with or exceeds the following ANSI C136 standards: .2, .3, .10, .14, .15, .22, .25, .31, .37, .41.

Web site information details: Click on any specific information details you need: / cULus Certification

LED Wattage values

Ordering Code	Total LEDs	Average System Watts[15]	Wattage label[16]
RFL-145W64LED	64	137	140
RFL-135W80LED	80	136	140
RFL-180W80LED	80	174	170
RFL-270W80LED	80	268	270
RFL-215W96LED	96	207	210
RFL-85W100LED	100	88	90
RFL-105W100LED	100	106	110
RFL-165W100LED	100	165	170
RFL-225W100LED	100	224	220
RFL-305W100LED	100	306	310
RFL-190W112LED	112	188	190
RFL-241W112LED	112	243	240
RFL-350W112LED	112	340	340

Ordering Code	Total LEDs	Average System Watts[15]	Wattage label[16]
RFL-130W120LED	120	133	130
RFL-200W120LED	120	196	200
RFL-270W120LED	120	269	270
RFL-155W140LED	140	154	150
RFL-230W140LED	140	229	230
RFL-310W140LED	140	311	310

15. Typical values, rounded.
16. As per ANSI C136.15-2015. Consult factory for other labeling needs.

4000K LED Lumen values

		Type R2M			Type R2S			Type R3M			Type R3S			Type 4			Type 5		
Ordering Code	Color Temp.	Lumen Output	Efficacy (LPW)	BUG Rating	Lumen Output	Efficacy (LPW)	BUG Rating	Lumen Output	Efficacy (LPW)	BUG Rating	Lumen Output	Efficacy (LPW)	BUG Rating	Lumen Output	Efficacy (LPW)	BUG Rating	Lumen Output	Efficacy (LPW)	BUG Rating
RFL-145W64LED	4000	19,162	140	B3-U0-G3	19,841	145	B3-U0-G2	19,102	139	B3-U0-G2	19,358	141	B2-U0-G3	19,012	139	B2-U0-G3	19,777	144	B4-U0-G2
RFL-135W80LED	4000	18,819	138	B3-U0-G3	19,486	143	B3-U0-G2	18,761	137	B3-U0-G2	19,012	139	B2-U0-G3	18,673	137	B2-U0-G3	19,423	142	B4-U0-G2
RFL-180W80LED	4000	23,952	138	B3-U0-G3	24,800	143	B3-U0-G2	23,877	137	B3-U0-G3	24,197	139	B3-U0-G3	23,765	137	B3-U0-G4	24,721	142	B5-U0-G3
RFL-270W80LED	4000	32,506	121	B3-U0-G3	33,658	126	B4-U0-G3	32,405	121	B3-U0-G3	32,839	122	B3-U0-G4	32,254	120	B3-U0-G4	33,549	125	B5-U0-G3
RFL-215W96LED	4000	28,742	139	B3-U0-G3	29,760	144	B3-U0-G2	28,653	138	B3-U0-G3	29,037	140	B3-U0-G4	28,519	138	B3-U0-G4	29,664	143	B5-U0-G3
RFL-85W100LED	4000	13,504	154	B3-U0-G3	N/A	N/A	N/A	13,576	155	B3-U0-G2	N/A	N/A	N/A	N/A	N/A	N/A	N/A	N/A	N/A
RFL-105W100LED	4000	16,168	153	B3-U0-G2	N/A	N/A	N/A	16,255	153	B3-U0-G2	N/A	N/A	N/A	N/A	N/A	N/A	N/A	N/A	N/A
RFL-165W100LED	4000	22,561	137	B3-U0-G3	N/A	N/A	N/A	22,683	137	B3-U0-G3	N/A	N/A	N/A	N/A	N/A	N/A	N/A	N/A	N/A
RFL-225W100LED	4000	28,600	128	B4-U0-G4	N/A	N/A	N/A	28,753	128	B4-U0-G4	N/A	N/A	N/A	N/A	N/A	N/A	N/A	N/A	N/A
RFL-305W100LED	4000	37,480	122	B4-U0-G4	N/A	N/A	N/A	37,681	123	B4-U0-G4	N/A	N/A	N/A	N/A	N/A	N/A	N/A	N/A	N/A
RFL-190W112LED	4000	26,347	140	B3-U0-G3	27,280	145	B3-U0-G2	26,266	140	B3-U0-G3	26,617	142	B3-U0-G3	26,143	139	B3-U0-G4	27,192	145	B5-U0-G3
RFL-241W112LED	4000	32,955	136	B4-U0-G3	34,122	140	B4-U0-G3	32,853	135	B3-U0-G3	33,293	137	B3-U0-G4	32,699	135	B3-U0-G4	34,012	140	B5-U0-G3
RFL-350W112LED	4000	42,515	125	B4-U0-G4	44,021	130	B4-U0-G3	42,382	125	B4-U0-G4	42,950	127	B3-U0-G4	42,184	124	B3-U0-G5	43,879	129	B5-U0-G4
RFL-130W120LED	4000	19,401	146	B3-U0-G3	N/A	N/A	N/A	19,505	147	B3-U0-G3	N/A	N/A	N/A	N/A	N/A	N/A	N/A	N/A	N/A
RFL-200W120LED	4000	27,073	138	B4-U0-G3	N/A	N/A	N/A	27,219	139	B3-U0-G3	N/A	N/A	N/A	N/A	N/A	N/A	N/A	N/A	N/A
RFL-270W120LED	4000	34,319	128	B4-U0-G4	N/A	N/A	N/A	34,504	128	B4-U0-G4	N/A	N/A	N/A	N/A	N/A	N/A	N/A	N/A	N/A
RFL-155W140LED	4000	22,635	147	B3-U0-G3	N/A	N/A	N/A	22,756	148	B3-U0-G3	N/A	N/A	N/A	N/A	N/A	N/A	N/A	N/A	N/A
RFL-230W140LED	4000	31,586	138	B4-U0-G4	N/A	N/A	N/A	31,756	139	B4-U0-G4	N/A	N/A	N/A	N/A	N/A	N/A	N/A	N/A	N/A
RFL-310W140LED	4000	40,039	129	B4-U0-G4	N/A	N/A	N/A	40,255	129	B4-U0-G4	N/A	N/A	N/A	N/A	N/A	N/A	N/A	N/A	N/A

Actual performance may vary due to installation variables including optics, mounting/ceiling height, dirt depreciation, light loss factor, etc.; highly recommended to confirm performance with a layout - contact Applications at signify.com/outdoorluminaires. Consult DLC QPL to confirm your specific fixture selection is DLC approved.

Note: Some data may be scaled based on tests of similar but not identical luminaries.

2700K LED Lumen values

		Type R2M			Type R2S			Type R3M			Type R3S			Type 4			Type 5		
Ordering Code	Color Temp.	Lumen Output	Efficacy (LPW)	BUG Rating	Lumen Output	Efficacy (LPW)	BUG Rating	Lumen Output	Efficacy (LPW)	BUG Rating	Lumen Output	Efficacy (LPW)	BUG Rating	Lumen Output	Efficacy (LPW)	BUG Rating	Lumen Output	Efficacy (LPW)	BUG Rating
RFL-145W64LED	2700	16,484	120	B3-U0-G3	17,068	125	B3-U0-G2	16,433	120	B3-U0-G2	16,653	122	B2-U0-G3	16,356	119	B2-U0-G3	17,013	124	B4-U0-G2
RFL-135W80LED	2700	16,190	119	B3-U0-G3	16,763	123	B3-U0-G2	16,140	118	B3-U0-G2	16,356	120	B2-U0-G3	16,064	118	B2-U0-G3	16,709	122	B4-U0-G2
RFL-180W80LED	2700	20,605	118	B3-U0-G3	21,335	123	B3-U0-G2	20,541	118	B3-U0-G3	20,816	120	B3-U0-G3	20,445	118	B3-U0-G4	21,267	122	B5-U0-G3
RFL-270W80LED	2700	27,965	104	B3-U0-G3	28,955	108	B4-U0-G3	27,877	104	B3-U0-G3	28,251	105	B3-U0-G4	27,747	103	B3-U0-G4	28,861	108	B5-U0-G3
RFL-215W96LED	2700	24,727	119	B3-U0-G3	25,602	124	B3-U0-G2	24,649	119	B3-U0-G3	24,980	121	B3-U0-G4	24,534	119	B3-U0-G4	25,520	123	B5-U0-G3
RFL-85W100LED	2700	11,731	134	B3-U0-G2	N/A	N/A	N/A	11,794	135	B2-U0-G2	N/A	N/A	N/A	N/A	N/A	N/A	N/A	N/A	N/A
RFL-105W100LED	2700	14,046	133	B3-U0-G2	N/A	N/A	N/A	14,122	133	B3-U0-G2	N/A	N/A	N/A	N/A	N/A	N/A	N/A	N/A	N/A
RFL-165W100LED	2700	19,600	119	B3-U0-G3	N/A	N/A	N/A	19,705	119	B3-U0-G3	N/A	N/A	N/A	N/A	N/A	N/A	N/A	N/A	N/A
RFL-225W100LED	2700	24,846	111	B3-U0-G3	N/A	N/A	N/A	24,980	112	B3-U0-G3	N/A	N/A	N/A	N/A	N/A	N/A	N/A	N/A	N/A
RFL-305W100LED	2700	32,561	106	B4-U0-G4	N/A	N/A	N/A	32,736	107	B4-U0-G4	N/A	N/A	N/A	N/A	N/A	N/A	N/A	N/A	N/A
RFL-190W112LED	2700	22,666	121	B3-U0-G3	23,468	125	B3-U0-G2	22,595	120	B3-U0-G3	22,898	122	B3-U0-G3	22,490	120	B3-U0-G4	23,393	125	B5-U0-G3
RFL-241W112LED	2700	28,351	117	B4-U0-G3	29,355	121	B4-U0-G3	28,263	116	B3-U0-G3	28,641	118	B3-U0-G4	28,130	116	B3-U0-G4	29,260	120	B5-U0-G3
RFL-350W112LED	2700	36,574	108	B4-U0-G4	37,870	112	B4-U0-G3	36,461	107	B4-U0-G4	36,949	109	B3-U0-G4	36,290	107	B3-U0-G5	37,748	111	B5-U0-G4
RFL-130W120LED	2700	16,855	127	B3-U0-G3	N/A	N/A	N/A	16,946	127	B3-U0-G3	N/A	N/A	N/A	N/A	N/A	N/A	N/A	N/A	N/A
RFL-200W120LED	2700	23,520	120	B3-U0-G3	N/A	N/A	N/A	23,647	121	B3-U0-G3	N/A	N/A	N/A	N/A	N/A	N/A	N/A	N/A	N/A
RFL-270W120LED	2700	29,815	111	B4-U0-G4	N/A	N/A	N/A	29,975	111	B4-U0-G4	N/A	N/A	N/A	N/A	N/A	N/A	N/A	N/A	N/A
RFL-155W140LED	2700	19,664	128	B3-U0-G3	N/A	N/A	N/A	19,770	128	B3-U0-G3	N/A	N/A	N/A	N/A	N/A	N/A	N/A	N/A	N/A
RFL-230W140LED	2700	27,440	120	B4-U0-G3	N/A	N/A	N/A	27,588	120	B3-U0-G3	N/A	N/A	N/A	N/A	N/A	N/A	N/A	N/A	N/A
RFL-310W140LED	2700	34,784	112	B4-U0-G4	N/A	N/A	N/A	34,971	112	B4-U0-G4	N/A	N/A	N/A	N/A	N/A	N/A	N/A	N/A	N/A

3000K LED Lumen values

		Type R2M			Type R2S			Type R3M			Type R3S			Type 4			Type 5		
Ordering Code	Color Temp.	Lumen Output	Efficacy (LPW)	BUG Rating	Lumen Output	Efficacy (LPW)	BUG Rating	Lumen Output	Efficacy (LPW)	BUG Rating	Lumen Output	Efficacy (LPW)	BUG Rating	Lumen Output	Efficacy (LPW)	BUG Rating	Lumen Output	Efficacy (LPW)	BUG Rating
RFL-145W64LED	3000	17,976	131	B3-U0-G3	18,613	136	B3-U0-G2	17,920	131	B3-U0-G2	18,160	133	B2-U0-G3	17,836	130	B2-U0-G3	18,553	135	B4-U0-G2
RFL-135W80LED	3000	17,655	129	B3-U0-G3	18,280	134	B3-U0-G2	17,600	129	B3-U0-G2	17,836	131	B2-U0-G3	17,518	128	B2-U0-G3	18,221	134	B4-U0-G2
RFL-180W80LED	3000	22,470	129	B3-U0-G3	23,266	134	B3-U0-G2	22,400	129	B3-U0-G3	22,700	130	B3-U0-G3	22,295	128	B3-U0-G4	23,191	133	B5-U0-G3
RFL-270W80LED	3000	30,495	114	B3-U0-G3	31,575	118	B4-U0-G3	30,400	113	B3-U0-G3	30,807	115	B3-U0-G4	30,258	113	B3-U0-G4	31,473	117	B5-U0-G3
RFL-215W96LED	3000	26,964	130	B3-U0-G3	27,919	135	B3-U0-G2	26,880	130	B3-U0-G3	27,240	132	B3-U0-G4	26,754	129	B3-U0-G4	27,829	134	B5-U0-G3
RFL-85W100LED	3000	12,839	147	B3-U0-G3	N/A	N/A	N/A	12,908	147	B3-U0-G2	N/A	N/A	N/A	N/A	N/A	N/A	N/A	N/A	N/A
RFL-105W100LED	3000	15,372	145	B3-U0-G2	N/A	N/A	N/A	15,455	146	B3-U0-G2	N/A	N/A	N/A	N/A	N/A	N/A	N/A	N/A	N/A
RFL-165W100LED	3000	21,451	130	B3-U0-G3	N/A	N/A	N/A	21,566	131	B3-U0-G3	N/A	N/A	N/A	N/A	N/A	N/A	N/A	N/A	N/A
RFL-225W100LED	3000	27,192	121	B4-U0-G3	N/A	N/A	N/A	27,338	122	B4-U0-G4	N/A	N/A	N/A	N/A	N/A	N/A	N/A	N/A	N/A
RFL-305W100LED	3000	35,636	116	B4-U0-G4	N/A	N/A	N/A	35,828	117	B4-U0-G4	N/A	N/A	N/A	N/A	N/A	N/A	N/A	N/A	N/A
RFL-190W112LED	3000	24,717	132	B3-U0-G3	25,592	136	B3-U0-G2	24,640	131	B3-U0-G3	24,970	133	B3-U0-G3	24,525	131	B3-U0-G4	25,510	136	B5-U0-G3
RFL-241W112LED	3000	30,916	127	B4-U0-G3	32,011	132	B4-U0-G3	30,820	127	B3-U0-G3	31,233	129	B3-U0-G4	30,676	126	B3-U0-G4	31,908	131	B5-U0-G3
RFL-350W112LED	3000	39,884	117	B4-U0-G4	41,297	122	B4-U0-G3	39,760	117	B4-U0-G4	40,293	119	B3-U0-G4	39,574	117	B3-U0-G5	41,164	121	B5-U0-G4
RFL-130W120LED	3000	18,446	139	B3-U0-G3	N/A	N/A	N/A	18,545	139	B3-U0-G3	N/A	N/A	N/A	N/A	N/A	N/A	N/A	N/A	N/A
RFL-200W120LED	3000	25,741	131	B3-U0-G3	N/A	N/A	N/A	25,880	132	B3-U0-G3	N/A	N/A	N/A	N/A	N/A	N/A	N/A	N/A	N/A
RFL-270W120LED	3000	32,631	121	B4-U0-G4	N/A	N/A	N/A	32,807	122	B4-U0-G4	N/A	N/A	N/A	N/A	N/A	N/A	N/A	N/A	N/A
RFL-155W140LED	3000	21,521	140	B3-U0-G3	N/A	N/A	N/A	21,637	141	B3-U0-G3	N/A	N/A	N/A	N/A	N/A	N/A	N/A	N/A	N/A
RFL-230W140LED	3000	30,032	131	B4-U0-G3	N/A	N/A	N/A	30,194	132	B4-U0-G4	N/A	N/A	N/A	N/A	N/A	N/A	N/A	N/A	N/A
RFL-310W140LED	3000	38,069	122	B4-U0-G4	N/A	N/A	N/A	38,274	123	B4-U0-G4	N/A	N/A	N/A	N/A	N/A	N/A	N/A	N/A	N/A

Actual performance may vary due to installation variables including optics, mounting/ceiling height, dirt depreciation, light loss factor, etc.; highly recommended to confirm performance with a layout – contact Applications at signify.com/outdoorluminaires. Consult DLC QPL to confirm your specific fixture selection is DLC approved.

Note: Some data may be scaled based on tests of similar but not identical luminaries.

San Francisco - Lumec S56 (3000K, top mounted RCD7 control ready, FAWS option 71w-20w)

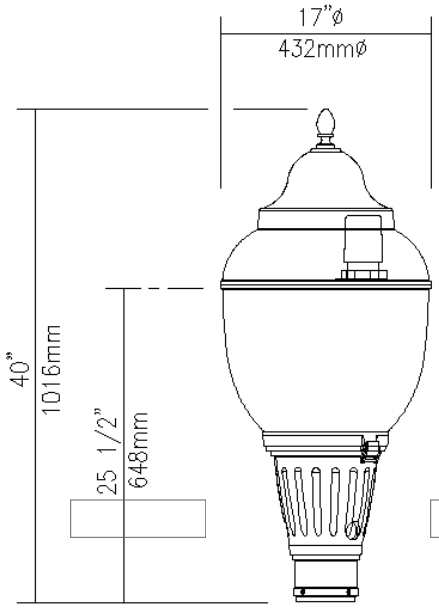

EPA: 2.17 sq ft / weight: 60 lb (27.3 kg)
Note: 3D image may not represent color or option selected.
Logos above include link, click to access.

Qty	Luminaire **[S56-023]-72W32LED3K-G3-ACDR-LE3W-UNV-DMG-SFX-[FAWS-071]-FN9-HS-PHXL-[RCD7-006]-TN3-BKTX**

Description of Components:

Finial: Decorative cast 356 aluminum, mechanically assembled.

Hood: (ACDR), One-piece, seamless, pressure-molded impact-resistant (DR) acrylic globe having internal prisms with smooth external self-cleaning surface, permanently assembled to the globe.

Access-Mechanism: A cast A360.1 aluminum technical ring with latch and hinge. The mechanism shall offer tool-free access to the inside of the luminaire. An embedded memory-retentive gasket shall ensure weatherproofness.

Heat Sink: Made of cast aluminum optimising the LEDs efficiency and life. Product does not use any cooling device with moving parts (only passive cooling device).

Globe: (ACDR), One-piece, seamless, injection-molded impact-resistant (DR) acrylic globe having an inner prismatic surface with semi-prismatic house side shield and glare softening prisms on the street side. The smooth external finish offers self-cleaning properties. The globe is permanently sealed onto the access-mechanism.

LED Module: Composed of 32 high-performance white LEDs. Color temperature as per ANSI/NEMA bin Warm White, 3000 Kelvin nominal (3045K +/- 175K or 2870K to 3220K), CRI 70 Min. 75 Typical.

Optical System: (LE3W), IES type III (asymmetrical), wide. Composed of high-performance optical grade PMMA acrylic refractor lenses to achieve desired distribution optimized to get maximum spacing, target lumens and a superior lighting uniformity. Optical system is rated IP66. Performance shall be tested per LM-63, LM-79 and TM-15 (IESNA) certifying its photometric performance. Street side indicated. **Complete with a (HS) House side shield.**

Driver: High power factor of 90% minimum. Electronic driver, operating range 50/60 Hz. **Auto-adjusting universal voltage input from 120 to 277 VAC rated for both application line to line or line to neutral, Class 1**, THD of 20% max. Maximum ambient operating temperature from -40F(-40C) to 130F(55C) degrees. **Driver comes with dimming compatible 0-10 volts.**

The current supplying the LEDs will be reduced by the driver if the driver experiences internal overheating as a protection to the LEDs and the electrical components. Output is protected from short circuits, voltage overload and current overload. Automatic recovery after correction. Standard built-in driver surge protection of 2.5kV (min).

Driver Options: (DMG), Dimming compatible 0-10 volts. For applicable warranty, certification and operation guide see Lumec dimmable luminaire specification document for unapproved device installed by other. To get document, click on this link: Specification document or go on web site on this address: https://www.signify.com/b-dam/signify/en-us/brands/lumec/Lumec-un-approved-control-device-installed-by-others-7_d.pdf

Surge Protector: Surge protector tested in accordance with ANSI/IEEE C62.45 per ANSI/IEEE C62.41.2 Scenario I Category C High Exposure 10kV/10kA waveforms for Line-Ground, Line-Neutral and Neutral-Ground, and in accordance with U.S. DOE (Department of Energy) MSSLC (Municipal Solid-State Street Lighting Consortium) model specification for LED roadway luminaires electrical immunity requirements for High Test Level 10kV / 10kA.

Fitter: Cast aluminum A360.1 c/w 4 set screws 3/8-16 UNC. Fits on a 4"(102mm) outside diameter by 4"(102mm) long tenon.

Luminaire Options: (FAWS-071), Field Adjustable Wattage Selector, pre-set to the highest position, can be easily switched in the field to the required position. This reduces total luminaire wattage consumption and reduces the light level. Note: It is not recommended to use FAWS with other dimming or controls; if you do, set the switch to position 4 (maximum output) to enable the other dimming or controls. Switching FAWS to any position other than 4 will disable the other dimming or controls.

Use the FAWS at: position 4 to obtain 71W, position 3 to obtain 55W, position 2 to obtain 35W and position 1 to obtain 20W. (PHXL), Photoelectric cell, Twist-lock Type, "Fail ON", extended life, input voltage of 120-277 VAC, operating range 50/60 Hz. Max rated load of 1000W/1800VA. Integrated standard surge protection of 640J. Rated for operation in an ambient temperature of -40°C/-40°F up to +70°C/+158°F. 10-year limited warranty from supplier. **(RCD7-006)** Receptacle with 7 pins, connected to be used with control node by others. **(TN3)**, Transition tenon 4" (102mm) O.D. by 4" (102mm) long , mechanically fastened to the fitter, to be installed over a 3 " (76mm) O.D. by 4" (102mm) long tenon.

Miscellaneous

Description of Components:

Wiring: Gauge (#14) TEW/AWM 1015 or 1230 wires, 6" (152mm) minimum exceeding from luminaire.

Hardware: All exposed screws shall be complete with Ceramic primer-seal basecoat to reduce seizing of the parts and offers a high resistance to corrosion. All seals and sealing devices are made and/or lined with EPDM and/or silicone and/or rubber.

Finish: Color to be **black textured RAL9005TX (BKTX)** and in accordance with the AAMA 2603 standard. Application of polyester powder coat paint (4 mils/100 microns) with ± 1 mils/24 microns of tolerance. The Thermosetting resins provides a discoloration resistant finish in accordance with the ASTM D2244 standard, as well as luster retention in keeping with the ASTM D523 standard and humidity proof in accordance with the ASTM D2247 standard.

The surface treatment achieves a minimum of 2000 hours for salt spray resistant finish in accordance with testing performed and per ASTM B117 standard.

LED products manufacturing standard: The electronic components sensitive to electrostatic discharge (ESD) such as light emitting diodes (LEDs) are assembled in compliance with IEC61340-5-1 and ANSI/ESD S20.20 standards so as to eliminate ESD events that could decrease the useful life of the product.

Quality Control: The manufacturer must provide a written confirmation of its ISO 9001-2008 and ISO 14001-2004 International Quality Standards Certification.

LED Wattage and Lumen Values: 3000K Serenade DSX LED post top (S56)

Globe					Type LE2			Type LE3			Type LE3W			Type LE4			Type LE5		
Ordering Code	Total LEDs	System Current (mA)	Color Temp.	Avg System Wattage (W)	Delivered Lumens	BUG Rating	Efficacy (Lm/W)	Delivered Lumens	BUG Rating	Efficacy (Lm/W)	Delivered Lumens	BUG Rating	Efficacy (Lm/W)	Delivered Lumens	BUG Rating	Efficacy (Lm/W)	Delivered Lumens	BUG Rating	Efficacy (Lm/W)
S56-35W32LED3K-G3	32	350	3000	37	4080	B1-U3-G1	110	4185	B1-U3-G2	113	4361	B1-U3-G2	118	4299	B1-U3-G2	116	4560	B3-U3-G2	123
S56-55W32LED3K-G3	32	530	3000	54	5803	B2-U3-G2	107	5952	B2-U3-G2	110	6202	B2-U3-G2	115	6113	B1-U3-G2	113	6486	B3-U3-G2	120
S56-72W32LED3K-G3	32	700	3000	71	7256	B2-U3-G2	102	7442	B2-U3-G2	105	7756	B2-U3-G3	109	7644	B2-U3-G2	108	8110	B4-U3-G2	114
S56-55W48LED3K-G3	48	350	3000	54	6215	B2-U3-G2	116	6375	B2-U3-G2	119	6643	B2-U3-G2	124	6548	B1-U3-G2	122	6947	B3-U3-G2	130
S56-80W48LED3K-G3	48	530	3000	80	8855	B2-U3-G2	111	9082	B2-U3-G2	114	9465	B2-U3-G3	118	9328	B2-U3-G3	117	9897	B4-U3-G3	124
S56-108W48LED3K-G3	48	700	3000	104	11108	B3-U3-G3	107	11393	B2-U3-G3	110	11873	B3-U3-G3	114	11702	B2-U3-G3	113	12415	B4-U3-G3	119

LED Wattage and Lumen Values: 4000K Serenade DSX LED post top (S56)

Globe					Type LE2			Type LE3			Type LE3W			Type LE4			Type LE5		
Ordering Code	Total LEDs	System Current (mA)	Color Temp.	Avg System Wattage (W)	Delivered Lumens	BUG Rating	Efficacy (Lm/W)	Delivered Lumens	BUG Rating	Efficacy (Lm/W)	Delivered Lumens	BUG Rating	Efficacy (Lm/W)	Delivered Lumens	BUG Rating	Efficacy (Lm/W)	Delivered Lumens	BUG Rating	Efficacy (Lm/W)
S56-35W32LED4K-G3	32	350	4000	37	4284	B1-U3-G1	116	4394	B1-U3-G2	119	4579	B1-U3-G2	124	4513	B1-U3-G2	122	4788	B3-U3-G2	129
S56-55W32LED4K-G3	32	530	4000	54	6093	B2-U3-G2	113	6250	B2-U3-G2	116	6513	B2-U3-G2	121	6419	B1-U3-G2	119	6810	B3-U3-G2	126
S56-72W32LED4K-G3	32	700	4000	71	7619	B2-U3-G2	107	7814	B2-U3-G2	110	8144	B2-U3-G3	115	8027	B2-U3-G2	113	8516	B4-U3-G3	120
S56-55W48LED4K-G3	48	350	4000	54	6526	B2-U3-G2	122	6694	B2-U3-G2	125	6975	B2-U3-G2	130	6875	B1-U3-G2	129	7294	B3-U3-G2	136
S56-80W48LED4K-G3	48	530	4000	80	9297	B2-U3-G2	116	9536	B2-U3-G3	119	9938	B2-U3-G3	124	9795	B2-U3-G3	122	10391	B4-U3-G3	130
S56-108W48LED4K-G3	48	700	4000	104	11663	B3-U3-G3	112	11963	B3-U3-G3	115	12467	B3-U3-G3	120	12287	B2-U3-G3	118	13036	B4-U3-G3	125

Actual performance may vary due to installation variables including optics, mounting/ceilling height, dirt depreciation, light loss factor, etc.; highly recommended to confirm performance with a layout - contact Applications at outdoorlighting.applications@signify.com.

S56 - S56C1-C2 Serenade DSX LED

Urban Luminaire

Specifications:

Housing

Finial: Decorative cast 356 aluminum, mechanically assembled.

Hood: Spun aluminum 1100 0 dome, permanently assembled to the globe.

Guard (S56C1/C2 only): In a round shape, this guard is made of four cast aluminum 356 decorative arms and one decorative ring. The guard is welded to the fitter.

Fitter: Cast aluminum A360.1 c/w 4 set screws 3/8-16 UNC. Fits on a 4"(102mm) outside diameter by 4"(102mm) long tenon.

Access-mechanism

A cast A360.1 aluminum technical ring with latch and hinge. The mechanism shall offer tool free access to the inside of the luminaire. An embedded memory retentive gasket shall ensure weatherproofness.

Light engine

LEDgine composed of 5 main components: **Heat Sink / Globe / LED lamp / Driver / Optical System**

Electrical components are RoHS compliant.

LED engine

LED type: Lumileds LUXEON T. Composed of high-performance white LEDs. Color temperature as per ANSI/NEMA bin Neutral White, 4000 Kelvin nominal (3985K +/- 275K or 3710K to 4260K) or Warm white, 3000 Kelvin nominal (3045K +/- 175K or 2870K to 3220K), CRI 70 Min. 75 Typical.

Globe

One-piece, seamless, injection-molded impact-resistant (DR) acrylic or Glass globe having an inner prismatic surface with semi-prismatic house side shield and glare softening prisms on the street side. The smooth external finish offers self-cleaning properties. The globe is permanently sealed onto the access-mechanism.

Heat sink

Made of cast aluminum optimising the LEDs efficiency and life. Product does not use any cooling device with moving parts (only passive cooling device).

Driver

Driver comes standard with dimming compatible 0-10V. High power factor of 95%. Electronic driver, operating range 50/60 Hz. Auto adjusting universal voltage input from 120 to 277 VAC rated for both application line to line or line to neutral, Class I, THD of 20% max. Maximum ambient operating temperature from 40F(40C) to 130F(55C) degrees. Certified in compliance to UL1310 cULus requirement. Dry and damp location. Assembled on a unitized removable tray with Tyco quick disconnect plug resisting to 221F(105C) degrees. The current supplying the LEDs will be reduced by the driver if the driver experiences internal overheating as a protection to the LEDs and the electrical components. Output is protected from short circuits, voltage overload and current overload. Automatic recovery after correction. Standard built in driver surge protection of 2.5kV (min).

Optical system

Composed of high performance optical grade PMMA acrylic refractor lenses to achieve desired distribution optimized to get maximum spacing, target lumens and a superior lighting uniformity. Optical system is rated IP66. Performance shall be tested per LM 63, LM 79 and TM 15 (IESNA) certifying its photometric performance. Street side indicated.

Prismatic globe: IP66 rated optical system, composed of individual pre-oriented lens to achieve desired distribution, assembled with globe having an inner prismatic surface permanently sealed onto the lower part of the heat sink.

LE2 - Type II (ASYM)
LE3 - Type III (ASYM)
LE3W - Type III (ASYM) Wide
LE4 - Type IV (ASYM)
LE5 - Type V (SYMM)

Driver options

AST: Pre-set driver for progressive start-up of the LED module(s) to optimize energy management and enhance visual comfort at start-up.

CLO: Pre-set driver to manage the lumen depreciation by adjusting the power given to the LEDs offering the same lighting intensity during the entire lifespan of the LED module.

DALI: Pre-set driver compatible with the DALI control system.

OTL: Pre-set driver to signal end of life of the LED module(s) for better fixture management.

DMG: Dimmable driver 0-10V.

CDMG: Dynadimmer standard dimming functionalities including pre-programmed scenarios to suit many applications and needs from safety to maximum energy savings.

Ordering Code	Scenario	Dimming Time	Dimming Level
CDMG**S25**	Safety	4 hours	25% power dimming
CDMG**S50**	Safety	4 hours	50% power dimming
CDMG**S75**	Safety	4 hours	75% power dimming
CDMG**M25**	Median	6 hours	25% power dimming
CDMG**M50**	Median	6 hours	50% power dimming
CDMG**M75**	Median	6 hours	75% power dimming
CDMG**E25**	Economy	8 hours	25% power dimming
CDMG**E50**	Economy	8 hours	50% power dimming
CDMG**E75**	Economy	8 hours	75% power dimming

Luminaire options

BC: Block Connector

FN1: Decorative finial

FN2: Decorative finial

S56 – S56C1-C2 Serenade DSX LED

Urban Luminaire

Specifications (continued)

Luminaire options (continued)

FN3: Decorative finial

FN4: Decorative finial

FN6: Decorative finial

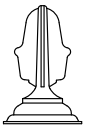

FN8: Decorative finial

FN9: Decorative finial

FN10: Decorative finial

FN11: Decorative finial

FNC: Finial painted copper

HS: House side shield

OVR: Override function

PH8: Photoelectric Cell, Twist-lock Type. Allows a 90 degree rotation.

PH9: Shorting cap, Twist-lock Type

PHXL: Extended life photoelectric cell, Twist-lock Type. Allows a 90° rotation.

RC: Receptacle 3 pins

SP2: Integral surge protector

TN2.875: 2-7/8" dia. Tenon adaptor

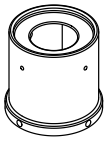

TN3: 3" dia. Tenon adaptor

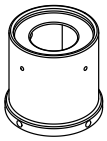

TN3.5: 3-1/2" dia. Tenon adaptor

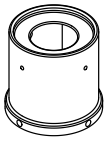

S56C1-C2 (only)

BS: Brass decorative band

BSC: Brass decorative band with clear coat

CU: Copper decorative band

CUC: Copper decorative band with clear coat

Motion Response

Tenon mount motion response provides 270º coverage on an adjustable knuckle. The coverage equals to up to 6 times the sensor height. It is an option offered jointly with the Dynadimmer **OVR** option, that can bring the light up to 100% when the motion response is triggered. It is available in a single or double mounting option. Finish options for the motion response device are white or dark gray. Finish options for the tenon must be specified to match the luminaire and pole. The tenon mount is fully rotatable 360°. This option is available for a 4" OD x 4" long tenon. See instruction sheet for time setting functionality (12 second to 16 minute turn off options) and for mounting instructions.

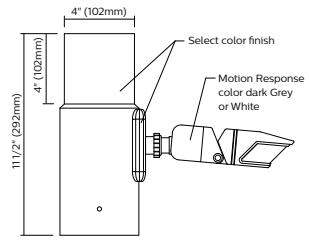

MR4PG1 or **MR4PW1**

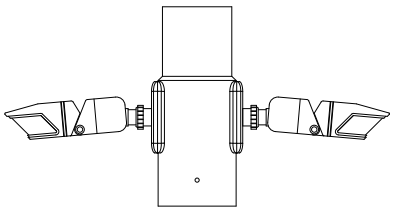

MR4PG2 or **MR4PW2**

S56 - S56C1-C2 Serenade DSX LED

Urban Luminaire

Specifications (continued)

Luminaire adaptors

SFOK: Oak leaf fitter. Fits on a 4" (102mm) outside diameter by 4" (102mm) long tenon.

SFX: Standard fitter. Fits on a 4" (102mm) outside diameter by 4" (102mm) long tenon.

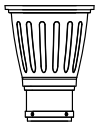

Surge Protector

Surge protector tested in accordance with ANSI/IEEE C62.45 per ANSI/IEEE C62.41.2 Scenario I Category C High Exposure 10kV/10kA waveforms for Line Ground, Line Neutral and Neutral Ground, and in accordance with U.S. DOE (Department of Energy) MSSLC (Municipal Solid State Street Lighting Consortium) model specification for LED roadway luminaires electrical immunity requirements for High Test Level 10kV / 10kA. **SP2** 20kV/20kA optional.

Finish

In accordance with the AAMA 2603 standard. Application of polyester powder coat paint (4 mils/100 microns) with +/- 1 mils/24 microns of tolerance. The Thermosetting resins provides a discoloration esistant finish in accordance with the ASTM D2244 standard, as well as luster retention in keeping with the ASTM D523 standard and humidity proof in accordance with the ASTM D2247 standard. The surface treatment achieves a minimum of 2000 hours for salt spray resistant finish in accordance with testing performed and per ASTM B117 standard.

Finish Options Include:

BE2TX: Textured Midnight Blue

BE6TX: Textured Ocean Blue

BE8TX: Textured Royal Blue

BG2TX: Textured Sandstone

BKTX: Textured Black

BRTX: Textured Bronze

GN4TX: Textured Blue Green

GN6TX: Textured Forest Green

GN8TX: Textured Dark Forest Green

GNTX: Textured Green

GR: Gray Sandtex

GY3TX: Textured Medium Grey

NP: Natural Aluminum

RD2TX: Textured Burgundy

RD4TX: Textured Scarlet

TG: Hammer-tone Gold

WHTX: Textured White

Wiring

Gauge (#14) TEW/AWM 1015 or 1230 wires, 6" (152mm) minimum exceeding from luminaire.

Hardware

All exposed screws shall be complete with Ceramic primer-seal base coat to reduce seizing of the parts and offers a high resistance to corrosion. All seals and sealing devices are made and/or lined with EPDM and/or silicone and/or rubber.

Luminaire useful life

Refer to IES files for energy consumption and delivered lumens for each option. Based on ISTMT in situ thermal testing in accordance with UL1598 and UL8750, System Reliability Tool, Advance data and Lumileds LM-80/TM-21 data, expected to reach 100,000+ hours with >L70 lumen maintenance @ 25°C (32LED's at 1050mA is 88,000). Luminaire Useful Life accounts for LED lumen maintenance AND all of these additional factors including: LED life, driver life, PCB substrate, solder joints, on/off cycles, burning hours and corrosion. Entire luminaire is rated for operation in ambient temperature of
-40°C / -40°F up to +35°C / +95°F.

LED products (manufacturing standard)

The electronic components sensitive to electrostatic discharge (ESD) such as light emitting diodes (LEDs) are assembled in compliance with IEC61340 5 1 and ANSI/ESD S20.20 standards so as to eliminate ESD
events that could decrease the useful life of the product.

Quality control

Manufactured to ISO 9001 2008 standards and ISO 14001-2004 International Quality Standards Certification.

Certifications and Compliance

CSA, cULus Listed for Canada and USA. Serenade LED luminaires are DesignLights Consortium qualified.

S56 – S56C1-C2 Serenade DSX LED

Urban Luminaire

Specifications (continued):

Poles & Brackets Sample configurations.

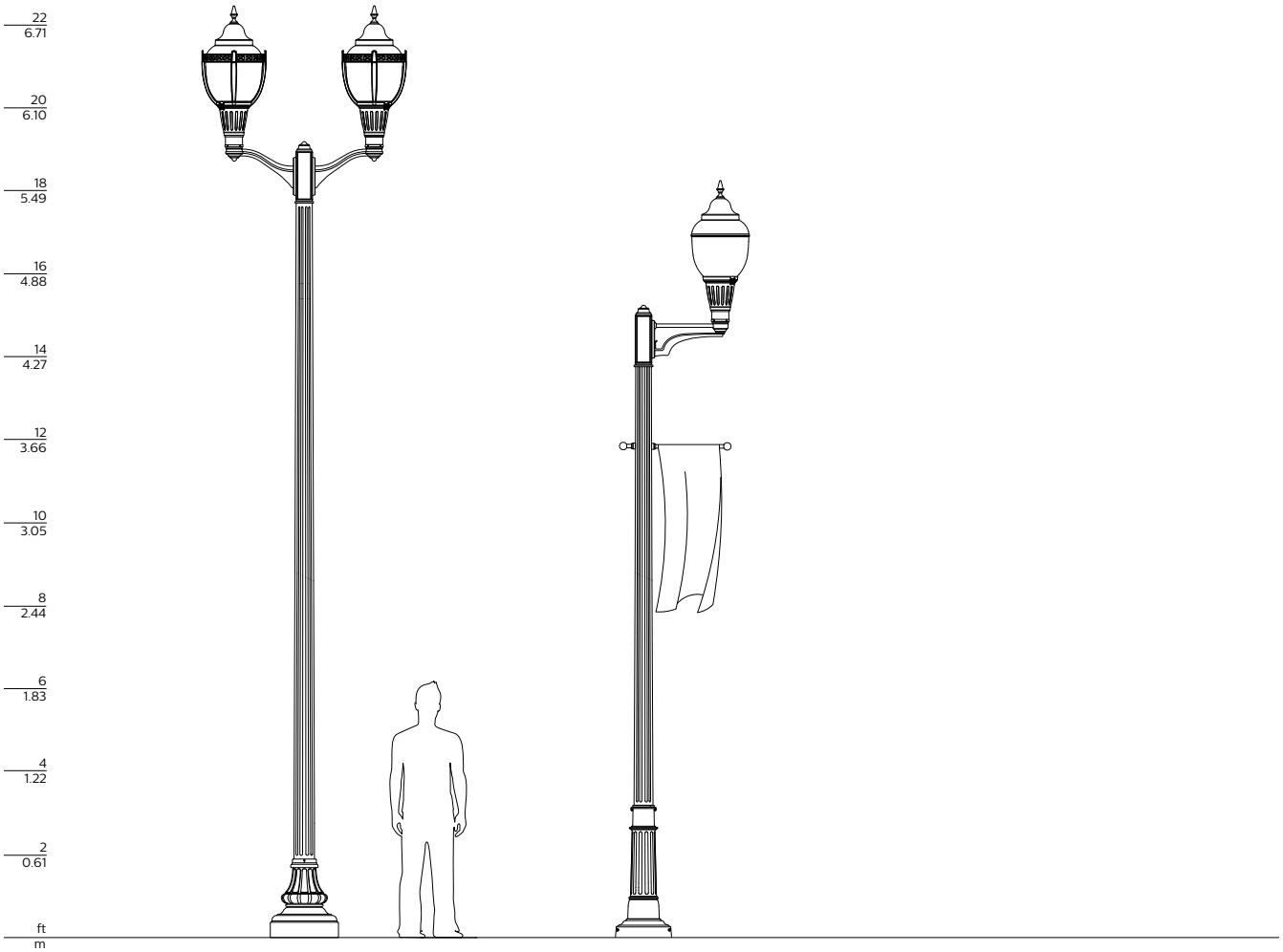

Luminaire: S56C2-SFX-FN10
Mounting: CRF-2
Pole: RTA50

Luminaire: S56-SFX-FN10
Mounting: CRC-1A
Pole: RTA800-BA

©2019 Signify Holding. All rights reserved. This document may be subject to change. No representation or warranty as to the accuracy or completeness of the information included herein is given and any liability for any action in reliance thereon is disclaimed. All trademarks are owned by Signify Holding or their respective owners.

Signify North America Corporation
200 Franklin Square Drive,
Somerset, NJ 08873
Telephone 855-486-2216

Signify Canada Ltd.
281 Hillmount Road,
Markham, ON, Canada L6C 2S3
Telephone 800-668-9008

San Francisco Lumec Serenade S56 (3000K, LE2, 53w, top mounted RCD7 control ready, HS)

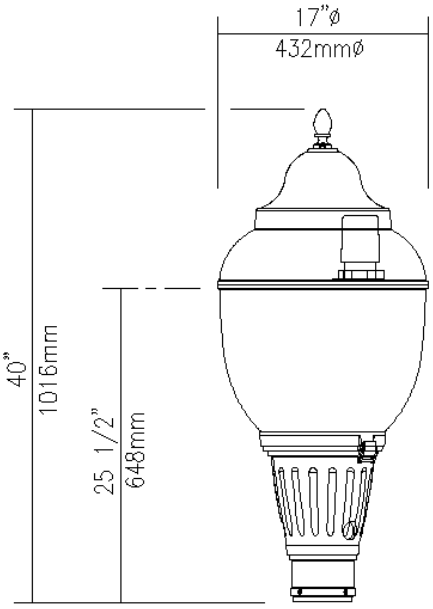

EPA: 2.17 sq ft / weight: 60 lb (27.3 kg)
Note: 3D image may not represent color or option selected.
Logos above include link, click to access.

Qty	Luminaire **S56-55W48LED3K-T-ACDR-LE2-UNV-DMG-SFX-FN9-HS-PH8XL-[RCD7-006]-TN3-BKTX**

Description of Components:

Finial: Decorative cast 356 aluminum, mechanically assembled.

Hood: (ACDR), One-piece, seamless, pressure-molded impact-resistant (DR) acrylic globe having internal prisms with smooth external self-cleaning surface, permanently assembled to the globe.

Access-Mechanism: A cast A360.1 aluminum technical ring with latch and hinge. The mechanism shall offer tool-free access to the inside of the luminaire. An embedded memory-retentive gasket shall ensure weatherproofness.

Heat Sink: Made of cast aluminum optimising the LEDs efficiency and life. Product does not use any cooling device with moving parts (only passive cooling device).

Globe: (ACDR), One-piece, seamless, injection-molded impact-resistant (DR) acrylic globe having an inner prismatic surface with semi-prismatic house side shield and glare softening prisms on the street side. The smooth external finish offers self-cleaning properties. The globe is permanently sealed onto the access-mechanism.

LED Module: LED type Philips Lumileds LUXEON T. Composed of 48 high-performance white LEDs. Color temperature as per ANSI/NEMA bin Warm White, 3000 Kelvin nominal (3045K +/- 175K or 2870K to 3220K), CRI 70 Min. 75 Typical.

Optical System: (LE2), IES type II (asymmetrical). Composed of high-performance optical grade PMMA acrylic refractor lenses to achieve desired distribution optimized to get maximum spacing, target lumens and a superior lighting uniformity. Optical system is rated IP66. Performance shall be tested per LM-63, LM-79 and TM-15 (IESNA) certifying its photometric performance. Street side indicated. **Complete with a (HS) House side shield.**

Driver: High power factor of 90% minimum. Electronic driver, operating range 50/60 Hz. **Auto-adjusting universal voltage input from 120 to 277 VAC rated for both application line to line or line to neutral, Class 1**, THD of 20% max. Maximum ambient operating temperature from -40F(-40C) to 130F(55C) degrees. **Driver comes with dimming compatible 0-10 volts.**

The current supplying the LEDs will be reduced by the driver if the driver experiences internal overheating as a protection to the LEDs and the electrical components. Output is protected from short circuits, voltage overload and current overload. Automatic recovery after correction. Standard built-in driver surge protection of 2.5kV (min).

Driver Options: (DMG), Dimming compatible 0-10 volts. For applicable warranty, certification and operation guide see Lumec dimmable luminaire specification document for unapproved device installed by other. To get document, click on this link: Specification document or go on web site on this address: https://www.signify.com/b-dam/signify/en-us/brands/lumec/Lumec-un-approved-control-device-installed-by-others-7_d.pdf

Surge Protector: Surge protector tested in accordance with ANSI/IEEE C62.45 per ANSI/IEEE C62.41.2 Scenario I Category C High Exposure 10kV/10kA waveforms for Line-Ground, Line-Neutral and Neutral-Ground, and in accordance with U.S. DOE (Department of Energy) MSSLC (Municipal Solid-State Street Lighting Consortium) model specification for LED roadway luminaires electrical immunity requirements for High Test Level 10kV / 10kA.

Fitter: Cast aluminum A360.1 c/w 4 set screws 3/8-16 UNC. Fits on a 4"(102mm) outside diameter by 4"(102mm) long tenon.

Luminaire Options: (PH8XL), Photoelectric Cell, Twist-lock Type, "Fail ON", extended life, compatible for 120-277 volt c/w receptacle -- 10-year limited warranty from supplier. **(RCD7-006)** Receptacle with 7 pins, connected to be used with control node by others. **(TN3)**, Transition tenon 4" (102mm) O.D. by 4" (102mm) long , mechanically fastened to the fitter, to be installed over a 3 " (76mm) O.D. by 4" (102mm) long tenon.

Miscellaneous

Description of Components:

Wiring: Gauge (#14) TEW/AWM 1015 or 1230 wires, 6" (152mm) minimum exceeding from luminaire.

Hardware: All exposed screws shall be complete with Ceramic primer-seal basecoat to reduce seizing of the parts and offers a high resistance to corrosion. All seals and sealing devices are made and/or lined with EPDM and/or silicone and/or rubber.

Finish: Color to be **black textured RAL9005TX (BKTX)** and in accordance with the AAMA 2603 standard. Application of polyester powder coat paint (4 mils/100 microns) with ± 1 mils/24 microns of tolerance. The Thermosetting resins provides a discoloration resistant finish in accordance with the ASTM D2244 standard, as well as luster retention in keeping with the ASTM D523 standard and humidity proof in accordance with the ASTM D2247 standard.

The surface treatment achieves a minimum of 2000 hours for salt spray resistant finish in accordance with testing performed and per ASTM B117 standard.

LED products manufacturing standard: The electronic components sensitive to electrostatic discharge (ESD) such as light emitting diodes (LEDs) are assembled in compliance with IEC61340-5-1 and ANSI/ESD S20.20 standards so as to eliminate ESD events that could decrease the useful life of the product.

Quality Control: The manufacturer must provide a written confirmation of its ISO 9001-2008 and ISO 14001-2004 International Quality Standards Certification.

LED Wattage and Lumen Values: Serenade

4000K

Ordering Code	Total LEDs	LED Current (mA)	Average System Watts[1]	Color Temp.	Type LE2			Type LE3			Type LE3W			Type LE4			Type LE5		
					Delivered Lumens[2]	Efficacy (LPW)	BUG Rating	Delivered Lumens[2]	Efficacy (LPW)	BUG Rating	Delivered Lumens[2]	Efficacy (LPW)	BUG Rating	Delivered Lumens[2]	Efficacy (LPW)	BUG Rating	Delivered Lumens[2]	Efficacy (LPW)	BUG Rating
35W32LED4K-T	32	350	37	4000K	3,498	95	B1-U3-G1	3,551	96	B1-U3-G1	3,746	102	B1-U3-G1	3,649	99	B1-U3-G1	4,028	109	B3-U3-G1
55W32LED4K-T	32	530	55	4000K	4,974	91	B2-U3-G2	5,050	92	B1-U3-G1	5,327	98	B2-U3-G2	5,189	95	B1-U3-G2	5,729	105	B3-U3-G2
72W32LED4K-T	32	700	71	4000K	6,220	87	B2-U3-G2	6,315	89	B2-U3-G2	6,661	93	B2-U3-G2	6,488	91	B1-U3-G2	7,163	100	B3-U3-G2
55W48LED4K-T	48	350	53	4000K	5,196	97	B2-U3-G2	5,409	101	B1-U3-G2	5,519	104	B2-U3-G2	5,524	104	B1-U3-G2	6,092	114	B3-U3-G2
80W48LED4K-T	48	530	80	4000K	7,402	93	B2-U3-G2	7,706	97	B2-U3-G2	7,863	99	B2-U3-G2	7,870	99	B2-U3-G2	8,678	109	B4-U3-G2
108W48LED4K-T	48	700	104	4000K	9,284	89	B2-U3-G2	9,667	93	B2-U3-G2	9,862	94	B2-U3-G2	9,871	95	B2-U3-G2	10,885	104	B4-U3-G2

LED Wattage and Lumen Values: Serenade

3000K

Ordering Code	Total LEDs	LED Current (mA)	Average System Watts[1]	Color Temp.	Type LE2			Type LE3			Type LE3W			Type LE4			Type LE5		
					Delivered Lumens[2]	Efficacy (LPW)	BUG Rating	Delivered Lumens[2]	Efficacy (LPW)	BUG Rating	Delivered Lumens[2]	Efficacy (LPW)	BUG Rating	Delivered Lumens[2]	Efficacy (LPW)	BUG Rating	Delivered Lumens[2]	Efficacy (LPW)	BUG Rating
35W32LED3K-T	32	350	37	3000K	3,132	85	B1-U3-G1	3,180	86	B1-U3-G1	3,354	91	B1-U3-G1	3,267	89	B1-U3-G1	3,607	98	B3-U3-G1
55W32LED3K-T	32	530	55	3000K	4,454	82	B1-U3-G1	4,522	83	B1-U3-G1	4,769	87	B1-U3-G2	4,646	85	B1-U3-G2	5,130	94	B3-U3-G1
72W32LED3K-T	32	700	71	3000K	5,569	78	B2-U3-G2	5,654	79	B2-U3-G2	5,964	84	B2-U3-G2	5,809	81	B1-U3-G2	6,414	90	B3-U3-G2
55W48LED3K-T	48	350	53	3000K	4,652	87	B1-U3-G1	4,843	91	B1-U3-G1	4,942	93	B1-U3-G2	4,946	93	B1-U3-G2	5,454	102	B3-U3-G1
80W48LED3K-T	48	530	80	3000K	6,628	83	B2-U3-G2	6,900	87	B2-U3-G2	7,040	89	B2-U3-G2	7,046	89	B1-U3-G2	7,770	98	B3-U3-G2
108W48LED3K-T	48	700	104	3000K	8,313	80	B2-U3-G2	8,654	83	B2-U3-G2	8,830	85	B2-U3-G2	8,838	85	B2-U3-G2	9,746	93	B4-U3-G2

1. System input wattage may vary based on input voltage, by up to +/- 10% , and based on manufacturer forward voltage, by up to +/- 8%.
2. Lumen values based on photometric tests performed in compliance with IESNA LM-79.

Note: Some data may be scaled based on tests of similar, but not identical, luminaires.

San Francisco Lumec Serenade S56 (3000K, LE2, 80w, top mounted RCD7 control ready, HS)

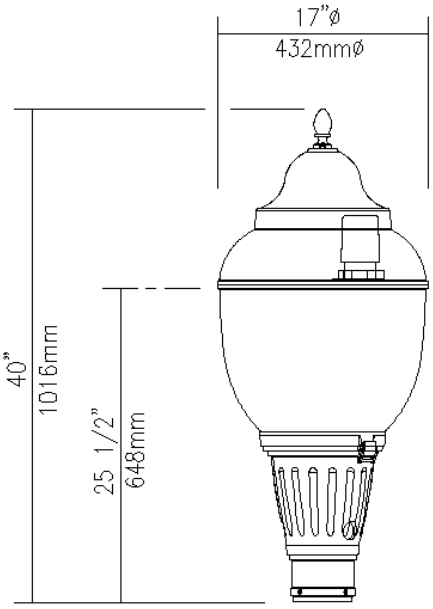

EPA: 2.17 sq ft / weight: 60 lb (27.3 kg)
Note: 3D image may not represent color or option selected.
Logos above include link, click to access.

Qty	Luminaire **S56-80W48LED3K-T-ACDR-LE2-UNV-DMG-SFX-FN9-HS-PH8XL-[RCD7-006]-TN3-BKTX**

Description of Components:

Finial: Decorative cast 356 aluminum, mechanically assembled.

Hood: (ACDR), One-piece, seamless, pressure-molded impact-resistant (DR) acrylic globe having internal prisms with smooth external self-cleaning surface, permanently assembled to the globe.

Access-Mechanism: A cast A360.1 aluminum technical ring with latch and hinge. The mechanism shall offer tool-free access to the inside of the luminaire. An embedded memory-retentive gasket shall ensure weatherproofness.

Heat Sink: Made of cast aluminum optimising the LEDs efficiency and life. Product does not use any cooling device with moving parts (only passive cooling device).

Globe: (ACDR), One-piece, seamless, injection-molded impact-resistant (DR) acrylic globe having an inner prismatic surface with semi-prismatic house side shield and glare softening prisms on the street side. The smooth external finish offers self-cleaning properties. The globe is permanently sealed onto the access-mechanism.

LED Module: LED type Philips Lumileds LUXEON T. Composed of 48 high-performance white LEDs. Color temperature as per ANSI/NEMA bin Warm White, 3000 Kelvin nominal (3045K +/- 175K or 2870K to 3220K), CRI 70 Min. 75 Typical.

Optical System: (LE2), IES type II (asymmetrical). Composed of high-performance optical grade PMMA acrylic refractor lenses to achieve desired distribution optimized to get maximum spacing, target lumens and a superior lighting uniformity. Optical system is rated IP66. Performance shall be tested per LM-63, LM-79 and TM-15 (IESNA) certifying its photometric performance. Street side indicated. **Complete with a (HS) House side shield.**

Driver: High power factor of 90% minimum. Electronic driver, operating range 50/60 Hz. **Auto-adjusting universal voltage input from 120 to 277 VAC rated for both application line to line or line to neutral, Class 1**, THD of 20% max. Maximum ambient operating temperature from -40F(-40C) to 130F(55C) degrees. **Driver comes with dimming compatible 0-10 volts.**

The current supplying the LEDs will be reduced by the driver if the driver experiences internal overheating as a protection to the LEDs and the electrical components. Output is protected from short circuits, voltage overload and current overload. Automatic recovery after correction. Standard built-in driver surge protection of 2.5kV (min).

Driver Options: (DMG), Dimming compatible 0-10 volts. For applicable warranty, certification and operation guide see Lumec dimmable luminaire specification document for unapproved device installed by other. To get document, click on this link: Specification document or go on web site on this address: https://www.signify.com/b-dam/signify/en-us/brands/lumec/Lumec-un-approved-control-device-installed-by-others-7_d.pdf

Surge Protector: Surge protector tested in accordance with ANSI/IEEE C62.45 per ANSI/IEEE C62.41.2 Scenario I Category C High Exposure 10kV/10kA waveforms for Line-Ground, Line-Neutral and Neutral-Ground, and in accordance with U.S. DOE (Department of Energy) MSSLC (Municipal Solid-State Street Lighting Consortium) model specification for LED roadway luminaires electrical immunity requirements for High Test Level 10kV / 10kA.

Fitter: Cast aluminum A360.1 c/w 4 set screws 3/8-16 UNC. Fits on a 4"(102mm) outside diameter by 4"(102mm) long tenon.

Luminaire Options: (PH8XL), Photoelectric Cell, Twist-lock Type, "Fail ON", extended life, compatible for 120-277 volt c/w receptacle -- 10-year limited warranty from supplier. **(RCD7-006)** Receptacle with 7 pins, connected to be used with control node by others. **(TN3)**, Transition tenon 4" (102mm) O.D. by 4" (102mm) long , mechanically fastened to the fitter, to be installed over a 3 " (76mm) O.D. by 4" (102mm) long tenon.

Miscellaneous

Description of Components:

Wiring: Gauge (#14) TEW/AWM 1015 or 1230 wires, 6" (152mm) minimum exceeding from luminaire.

Hardware: All exposed screws shall be complete with Ceramic primer-seal basecoat to reduce seizing of the parts and offers a high resistance to corrosion. All seals and sealing devices are made and/or lined with EPDM and/or silicone and/or rubber.

Finish: Color to be **black textured RAL9005TX (BKTX)** and in accordance with the AAMA 2603 standard. Application of polyester powder coat paint (4 mils/100 microns) with ± 1 mils/24 microns of tolerance. The Thermosetting resins provides a discoloration resistant finish in accordance with the ASTM D2244 standard, as well as luster retention in keeping with the ASTM D523 standard and humidity proof in accordance with the ASTM D2247 standard.

The surface treatment achieves a minimum of 2000 hours for salt spray resistant finish in accordance with testing performed and per ASTM B117 standard.

LED products manufacturing standard: The electronic components sensitive to electrostatic discharge (ESD) such as light emitting diodes (LEDs) are assembled in compliance with IEC61340-5-1 and ANSI/ESD S20.20 standards so as to eliminate ESD events that could decrease the useful life of the product.

Quality Control: The manufacturer must provide a written confirmation of its ISO 9001-2008 and ISO 14001-2004 International Quality Standards Certification.

LED Wattage and Lumen Values: Serenade

4000K

					Type LE2			Type LE3			Type LE3W			Type LE4			Type LE5		
Ordering Code	Total LEDs	LED Current (mA)	Average System Watts[1]	Color Temp.	Delivered Lumens[2]	Efficacy (LPW)	BUG Rating	Delivered Lumens[2]	Efficacy (LPW)	BUG Rating	Delivered Lumens[2]	Efficacy (LPW)	BUG Rating	Delivered Lumens[2]	Efficacy (LPW)	BUG Rating	Delivered Lumens[2]	Efficacy (LPW)	BUG Rating
35W32LED4K-T	32	350	37	4000K	3,498	95	B1-U3-G1	3,551	96	B1-U3-G1	3,746	102	B1-U3-G1	3,649	99	B1-U3-G1	4,028	109	B3-U3-G1
55W32LED4K-T	32	530	55	4000K	4,974	91	B2-U3-G2	5,050	92	B1-U3-G1	5,327	98	B2-U3-G2	5,189	95	B1-U3-G2	5,729	105	B3-U3-G2
72W32LED4K-T	32	700	71	4000K	6,220	87	B2-U3-G2	6,315	89	B2-U3-G2	6,661	93	B2-U3-G2	6,488	91	B1-U3-G2	7,163	100	B3-U3-G2
55W48LED4K-T	48	350	53	4000K	5,196	97	B2-U3-G2	5,409	101	B1-U3-G2	5,519	104	B2-U3-G2	5,524	104	B1-U3-G2	6,092	114	B3-U3-G2
80W48LED4K-T	48	530	80	4000K	7,402	93	B2-U3-G2	7,706	97	B2-U3-G2	7,863	99	B2-U3-G2	7,870	99	B2-U3-G2	8,678	109	B4-U3-G2
108W48LED4K-T	48	700	104	4000K	9,284	89	B2-U3-G2	9,667	93	B2-U3-G2	9,862	94	B2-U3-G2	9,871	95	B2-U3-G2	10,885	104	B4-U3-G2

LED Wattage and Lumen Values: Serenade

3000K

					Type LE2			Type LE3			Type LE3W			Type LE4			Type LE5		
Ordering Code	Total LEDs	LED Current (mA)	Average System Watts[1]	Color Temp.	Delivered Lumens[2]	Efficacy (LPW)	BUG Rating	Delivered Lumens[2]	Efficacy (LPW)	BUG Rating	Delivered Lumens[2]	Efficacy (LPW)	BUG Rating	Delivered Lumens[2]	Efficacy (LPW)	BUG Rating	Delivered Lumens[2]	Efficacy (LPW)	BUG Rating
35W32LED3K-T	32	350	37	3000K	3,132	85	B1-U3-G1	3,180	86	B1-U3-G1	3,354	91	B1-U3-G1	3,267	89	B1-U3-G1	3,607	98	B3-U3-G1
55W32LED3K-T	32	530	55	3000K	4,454	82	B1-U3-G1	4,522	83	B1-U3-G1	4,769	87	B1-U3-G2	4,646	85	B1-U3-G2	5,130	94	B3-U3-G1
72W32LED3K-T	32	700	71	3000K	5,569	78	B2-U3-G2	5,654	79	B2-U3-G2	5,964	84	B2-U3-G2	5,809	81	B1-U3-G2	6,414	90	B3-U3-G2
55W48LED3K-T	48	350	53	3000K	4,652	87	B1-U3-G1	4,843	91	B1-U3-G1	4,942	93	B1-U3-G2	4,946	93	B1-U3-G2	5,454	102	B3-U3-G1
80W48LED3K-T	48	530	80	3000K	6,628	83	B2-U3-G2	6,900	87	B2-U3-G2	7,040	89	B2-U3-G2	7,046	89	B1-U3-G2	7,770	98	B3-U3-G2
108W48LED3K-T	48	700	104	3000K	8,313	80	B2-U3-G2	8,654	83	B2-U3-G2	8,830	85	B2-U3-G2	8,838	85	B2-U3-G2	9,746	93	B4-U3-G2

1. System input wattage may vary based on input voltage, by up to +/- 10% , and based on manufacturer forward voltage, by up to +/- 8%.
2. Lumen values based on photometric tests performed in compliance with IESNA LM-79.

Note: Some data may be scaled based on tests of similar, but not identical, luminaires.

San Francisco – Lumec UrbanScape 3000K, LE3 distr., HS, FAWS w/ 68w,55w,35w,20w options

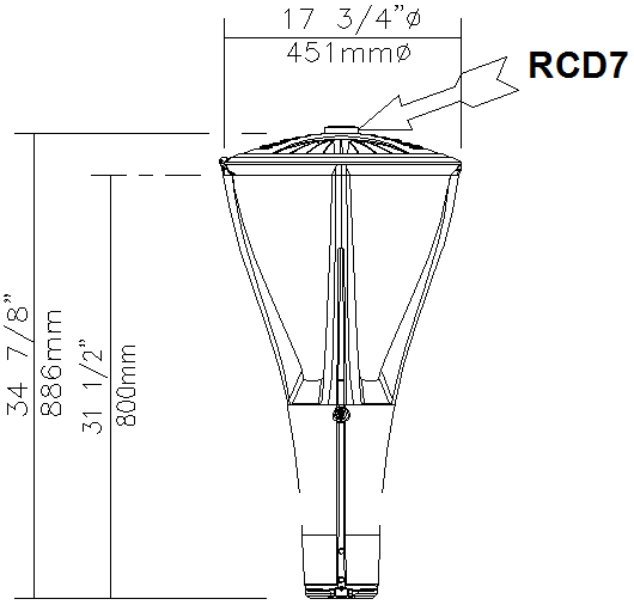

EPA: 1.698 sq ft / weight: 32.2 lb (14.6 kg)
Note: 3D image may not represent color or option selected.
Logos above include link, click to access.

Qty	Luminaire **[MPTC-028]-[72W32LED3K-007]-G3-LE3-UNV-DMG-[FAWS-068]-HS-RCD7-GY3TX**

Description of Components:

Hood: Made of die cast A360.1 Aluminum alloy 0.100 (2.5mm) minimum thickness, mechanically assembled to the cast aluminum heat sink.

Guard: In a round shape with 4 arms and a built-in mechanical ring, this guard is a one-piece die cast A360 Aluminum alloy 0.100 (2.5mm) minimum thickness, mechanically assembled to the fitter.

Access-Mechanism: A die cast A360.1 Aluminum alloy 0.100 (2.5mm) minimum thickness technical ring with latch and hinge.

Light Engine: LEDgine composed of 4 main components: **Heat Sink / LED Module / Optical System / Driver**
Electrical components are RoHS compliant. Maximum ambient operating temperature up to 40C(104F) degrees.

Heat Sink: Made of cast aluminum optimising the LEDs efficiency and life. Product does not use any cooling device with moving parts (only passive cooling device).

Lens: Made of soda-lime tempered glass lens, mechanically assembled and sealed onto the ring of the access mechanism.

LED Module: Composed of 32 high-performance white LEDs. Color temperature as per ANSI/NEMA bin Warm White, 3000 Kelvin nominal (3045K +/- 175K or 2870K to 3220K), CRI 70 Min. 75 Typical.

Optical System: (LE3), IES type III (asymmetrical). Composed of high-performance optical grade PMMA acrylic refractor lenses to achieve desired distribution optimized to get maximum spacing, target lumens and a superior lighting uniformity.

Optical system is rated IP66. Performance shall be tested per LM-63, LM-79 and TM-15 (IESNA) certifying its photometric performance. Street side indicated. **Complete with a (HS) House side shield.**0% uplight and U0 per IESNA TM-15.

Driver: High power factor of 90% minimum. Electronic driver, operating range 50/60 Hz. **Auto-adjusting universal voltage input from 120 to 277 VAC rated for both application line to line or line to neutral, Class 1**, THD of 20% max. Maximum ambient operating temperature from -40F(-40C) to 130F(55C) degrees.Assembled on a unitized removable tray with Tyco quick disconnect plug resisting to 221F(105C) degrees. **Driver comes with dimming compatible 0-10 volts.**

The current supplying the LEDs will be reduced by the driver if the driver experiences internal overheating as a protection to the LEDs and the electrical components. Output is protected from short circuits, voltage overload and current overload. Automatic recovery after correction. Standard built-in driver surge protection of 2.5kV (min).

Driver Options: (DMG), Dimming compatible 0-10 volts. For applicable warranty, certification and operation guide see Lumec dimmable luminaire specification document for unapproved device installed by other. To get document, click on this link: Specification document or go on web site on this address: https://www.signify.com/b-dam/signify/en-us/brands/lumec/Lumec-un-approved-control-device-installed-by-others-7_d.pdf

Surge Protector: Surge protector tested in accordance with ANSI/IEEE C62.45 per ANSI/IEEE C62.41.2 Scenario I Category C High Exposure 10kV/10kA waveforms for Line-Ground, Line-Neutral and Neutral-Ground, and in accordance with U.S. DOE (Department of Energy) MSSLC (Municipal Solid-State Street Lighting Consortium) model specification for LED roadway luminaires electrical immunity requirements for High Test Level 10kV / 10kA.

Fitter: Made of die cast A360.1 Aluminum alloy 0.100 (2.5mm) minimum thickness, the fitter is complete with a watertight tool-free access door giving access to the driver rated IP66, and a terminal block that accepts (#2 max.) wires from the primary circuit. Comes with an easy self adjusting system with two (2) set screws 3/8 16 UNC for ease of maintenance and installation. Fits on a 4"(102mm) outside diameter by 4"(102mm) long tenon.

Luminaire Options: (FAWS-068), Field Adjustable Wattage Selector, pre-set to the highest position, can be easily switched in the field to the required position. This reduces total luminaire wattage consumption and reduces the light level. Note: It is not recommended to use FAWS with other dimming or controls; if you do, set the switch to position 4 (maximum output) to enable the other dimming or controls. Switching FAWS to any position other than 4 will disable the other dimming or controls.

Use the FAWS at: position 4 to obtain 68W, position 3 to obtain 55W, position 2 to obtain 35W and position 1 to obtain 20W. (RCD7), Receptacle with 7 pins enabling dimming and with two extra connections for future use (these connections are capped off at the factory - requires connections to be made in the field), can be used with a twist-lock control device or photoelectric cell or a shorting cap. Use of photocell or shorting cap is required to ensure proper illumination.

Luminaire Recyclable Material: 82.5% of the materials used in this product can be recycled. The calculation is based on the weight of contents.

Miscellaneous

Description of Components:

Wiring: The connection of the luminaire is done using a terminal block connector 600V, 85A for use with bare son (#2 max.) wires from the primary circuit, located inside the fitter.

Hardware: All exposed screws shall be complete with Ceramic primer-seal basecoat to reduce seizing of the parts and offers a high resistance to corrosion. All seals and sealing devices are made and/or lined with EPDM and/or silicone and/or rubber.

Finish: Color to be **medium grey textured (GY3TX)** and in accordance with the AAMA 2603 standard. Application of polyester powder coat paint (4 mils/100 microns) with ± 1 mils/24 microns of tolerance. The Thermosetting resins provides a discoloration resistant finish in accordance with the ASTM D2244 standard, as well as luster retention in keeping with the ASTM D523 standard and humidity proof in accordance with the ASTM D2247 standard.

The surface treatment achieves a minimum of 2000 hours for salt spray resistant finish in accordance with testing performed and per ASTM B117 standard.

LED products manufacturing standard: The electronic components sensitive to electrostatic discharge (ESD) such as light emitting diodes (LEDs) are assembled in compliance with IEC61340-5-1 and ANSI/ESD S20.20 standards so as to eliminate ESD events that could decrease the useful life of the product.

Quality Control: The manufacturer must provide a written confirmation of its ISO 9001-2008 and ISO 14001-2004 International Quality Standards Certification.

Vibration Resistance: The MPTC meets the **ANSI C136.31, 2010**, American National Standard for Roadway Luminaire Vibration specifications for Bridge/overpass applications. (Tested for 3G over 100 000 cycles)

Web site information details: / cULus Certification

LED Wattage and Lumen Values: 3000K UrbanScape LED Post-Top (MPTC)

House-side Shield					Type LE2-HS			Type LE3-HS			Type LE3W-HS			Type LE4-HS		
Ordering Code	Total LEDs	System Current (mA)	Color Temp.	Avg System Wattage (W)	Delivered Lumens	BUG Rating	Efficacy (Lm/W)	Delivered Lumens	BUG Rating	Efficacy (Lm/W)	Delivered Lumens	BUG Rating	Efficacy (Lm/W)	Delivered Lumens	BUG Rating	Efficacy (Lm/W)
MPTC-35W32LED3K-G3	32	350	3000	36	2910	B0-U0-G0	81	2909	B0-U0-G1	81	2571	B0-U0-G1	71	2808	B0-U0-G1	78
MPTC-55W32LED3K-G3	32	530	3000	54	4173	B1-U0-G1	77	4172	B1-U0-G1	77	3687	B1-U0-G1	68	4027	B1-U0-G1	75
MPTC-72W32LED3K-G3	32	700	3000	68	5263	B1-U0-G1	77	5262	B1-U0-G1	77	4651	B1-U0-G1	68	5079	B1-U0-G1	75
MPTC-97W32LED3K-G3	32	1050	3000	101	7257	B1-U0-G1	72	7256	B1-U0-G2	72	6412	B1-U0-G2	63	7003	B1-U0-G2	69
MPTC-55W48LED3K-G3	48	350	3000	53	4426	B1-U0-G1	84	4426	B1-U0-G1	84	3911	B1-U0-G1	74	4271	B1-U0-G1	81
MPTC-80W48LED3K-G3	48	530	3000	79	6350	B1-U0-G1	80	6349	B1-U0-G1	80	5611	B1-U0-G2	71	6128	B1-U0-G2	78
MPTC-108W48LED3K-G3	48	700	3000	102	8008	B1-U0-G1	79	8006	B1-U0-G2	78	7075	B1-U0-G2	69	7727	B1-U0-G2	76
MPTC-140W48LED3K-G3	48	1050	3000	152	11042	B1-U0-G2	73	11040	B1-U0-G2	73	9757	B1-U0-G2	64	10656	B1-U0-G2	70
MPTC-70W64LED3K-G3	64	350	3000	71	5917	B1-U0-G1	83	5915	B1-U0-G1	83	5228	B1-U0-G2	74	5709	B1-U0-G2	80
MPTC-110W64LED3K-G3	64	530	3000	102	8487	B1-U0-G2	83	8485	B1-U0-G2	83	7498	B1-U0-G2	74	8189	B1-U0-G2	80
MPTC-90W80LED3K-G3	80	350	3000	88	7305	B1-U0-G1	83	7303	B1-U0-G2	83	6454	B1-U0-G2	73	7049	B1-U0-G2	80
MPTC-135W80LED3K-G3	80	530	3000	132	10478	B1-U0-G2	79	10476	B1-U0-G2	79	9258	B1-U0-G2	70	10111	B1-U0-G2	77

LED Wattage and Lumen Values: 4000K UrbanScape LED Post-Top (MPTC)

House-side Shield					Type LE2-HS			Type LE3-HS			Type LE3W-HS			Type LE4-HS		
Ordering Code	Total LEDs	System Current (mA)	Color Temp.	Avg System Wattage (W)	Delivered Lumens	BUG Rating	Efficacy (Lm/W)	Delivered Lumens	BUG Rating	Efficacy (Lm/W)	Delivered Lumens	BUG Rating	Efficacy (Lm/W)	Delivered Lumens	BUG Rating	Efficacy (Lm/W)
MPTC-35W32LED4K-G3	32	350	4000	36	3056	B0-U0-G1	85	3054	B0-U0-G1	85	2695	B0-U0-G1	75	2948	B0-U0-G1	82
MPTC-55W32LED4K-G3	32	530	4000	54	4382	B1-U0-G1	81	4381	B1-U0-G1	81	3865	B1-U0-G1	72	4228	B1-U0-G1	78
MPTC-72W32LED4K-G3	32	700	4000	68	5526	B1-U0-G1	81	5525	B1-U0-G1	81	4876	B1-U0-G2	72	5333	B1-U0-G2	78
MPTC-97W32LED4K-G3	32	1050	4000	101	7620	B1-U0-G1	75	7619	B1-U0-G2	75	6723	B1-U0-G2	67	7353	B1-U0-G2	73
MPTC-55W48LED4K-G3	48	350	4000	53	4647	B1-U0-G1	88	4647	B1-U0-G1	88	4100	B1-U0-G1	77	4485	B1-U0-G1	85
MPTC-80W48LED4K-G3	48	530	4000	79	6668	B1-U0-G1	84	6666	B1-U0-G2	84	5882	B1-U0-G2	75	6434	B1-U0-G2	81
MPTC-108W48LED4K-G3	48	700	4000	102	8408	B1-U0-G2	82	8406	B1-U0-G2	82	7418	B1-U0-G2	73	8113	B1-U0-G2	80
MPTC-140W48LED4K-G3	48	1050	4000	152	11594	B1-U0-G2	76	11592	B1-U0-G2	76	10229	B1-U0-G2	67	11189	B1-U0-G2	74
MPTC-70W64LED4K-G3	64	350	4000	71	6213	B1-U0-G1	88	6211	B1-U0-G1	87	5481	B1-U0-G2	77	5994	B1-U0-G2	84
MPTC-110W64LED4K-G3	64	530	4000	102	8911	B1-U0-G2	87	8909	B1-U0-G2	87	7861	B1-U0-G2	77	8598	B1-U0-G2	84
MPTC-90W80LED4K-G3	80	350	4000	88	7670	B1-U0-G1	87	7668	B1-U0-G2	87	6766	B1-U0-G2	77	7401	B1-U0-G2	84
MPTC-135W80LED4K-G3	80	530	4000	132	11002	B1-U0-G2	83	11000	B1-U0-G2	83	9706	B1-U0-G2	74	10617	B1-U0-G2	80

Actual performance may vary due to installation variables including optics, mounting/ceilling height, dirt depreciation, light loss factor, etc.; highly recommended to confirm performance with a layout - contact Applications at outdoorlighting.applications@signify.com.

MPTC UrbanScape LED Post Top

Urban Luminaire

Specifications (continued)

Poles

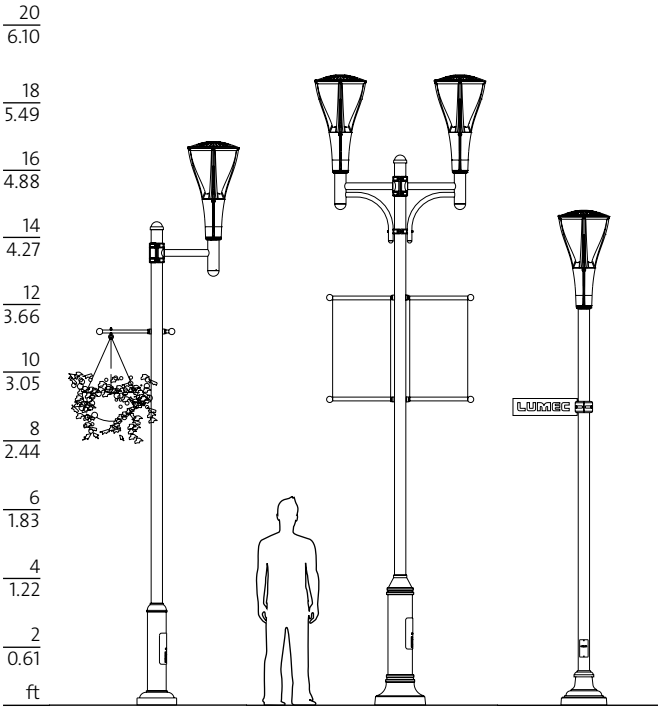

MPTC
Pole: P604-PS
Mounting: M10-1A

MPTC
Pole: SM8-BA
Mounting: M30-2

MPTC
Pole: APR4-LBC3-SA1

Consult Signify.com/outdoorluminaires for details and the complete line of Signify poles and brackets.

©2019 Signify Holding. All rights reserved. This document may be subject to change. No representation or warranty as to the accuracy or completeness of the information included herein is given and any liability for any action in reliance thereon is disclaimed. All trademarks are owned by Signify Holding or their respective owners.

Signify North America Corporation
200 Franklin Square Drive,
Somerset, NJ 08873
Telephone 855-486-2216

Signify Canada Ltd.
281 Hillmount Road,
Markham, ON, Canada L6C 2S3
Telephone 800-668-9008

City of San Francisco Lumec UrbanScape (3000K, roof mounted RCD7 receptecle control ready)
(55 watt, LE2 distribution, 100hps replacement)

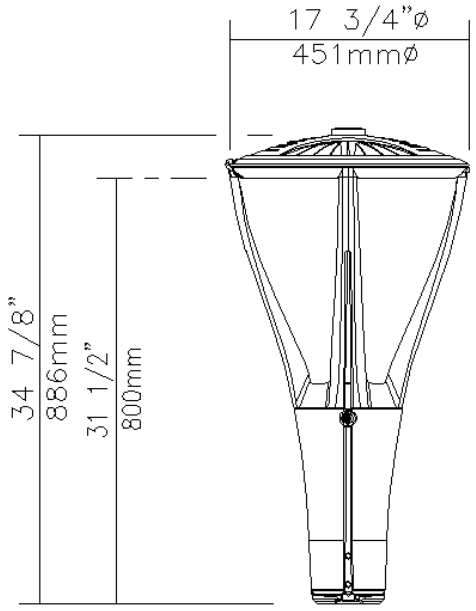

EPA: 1.698 sq ft / weight: 32.2 lb (14.6 kg)
Note: 3D image may not represent color or option selected.
Logos above include link, click to access.

Qty	Luminaire	**[MPTC-016]-55W48LED3K-G2-LE2-UNIV- RCD7-GY3TX**

Description of Components:

Hood: Made of die cast A360.1 Aluminum alloy 0.100 (2.5mm) minimum thickness, mechanically assembled to the cast aluminum heat sink.

Guard: In a round shape with 4 arms and a built-in mechanical ring, this guard is a one piece die cast A360 Aluminum alloy 0.100 (2.5mm) minimum thickness, mechanically assembled to the fitter.

Access-Mechanism: A die cast A360.1 Aluminum alloy 0.100 (2.5mm) minimum thickness technical ring with latch and hinge.

Light Engine: LEDgine composed of 4 main components: **Heat Sink / LED Module / Optical System / Driver**
Electrical components are RoHS compliant. Maximum ambient operating temperature up to 40C(104F) degrees.

Heat Sink: Made of cast aluminum optimising the LEDs efficiency and life. Product does not use any cooling device with moving parts (only passive cooling device).

Lens: Made of soda-lime tempered glass lens, mechanically assembled and sealed onto the ring of the access mechanism.

LED Module: Composed of 48 high-performance white LEDs. Color temperature as per ANSI/NEMA bin Warm White, 3000 Kelvin, CRI 70 Min. 75 Typical.

Optical System: (LE2), IES type 2 (assymmetrical). Composed of high-performance optical polymer refractor lenses to achieve desired distribution optimized to get maximum spacing, target lumens and a superior lighting uniformity. System is

rated IP66. Performance shall be tested per LM-63, LM-79 and TM-15 (IESNA) certifying its photometric performance. Street side indicated. Dark Sky compliant with 0% uplight and U0 per IESNA TM-15.

Driver: High power factor of 90% minimum. Electronic driver, operating range 50/60 Hz. **Auto-adjusting universal voltage input from 120 to 277 VAC rated for both application line to line or line to neutral, Class I**, THD of 20% max. Maximum ambient operating temperature from -40F(-40C) to 130F(55C) degrees.Assembled on a unitized removable tray with Tyco quick disconnect plug resisting to 221F(105C) degrees. **Driver comes with dimming compatible 0-10 volts.**

The current supplying the LEDs will be reduced by the driver if the driver experiences internal overheating as a protection to the LEDs and the electrical components. Output is protected from short circuits, voltage overload and current overload. Automatic recovery after correction. Standard built-in driver surge protection of 2.5kV (min).

Surge Protector: Surge protector tested in accordance with ANSI/IEEE C62.45 per ANSI/IEEE C62.41.2 Scenario I Category C High Exposure 10kV/10kA waveforms for Line-Ground, Line-Neutral and Neutral-Ground, and in accordance with U.S. DOE (Department of Energy) MSSLC (Municipal Solid-State Street Lighting Consortium) model specification for LED roadway luminaires electrical immunity requirements for High Test Level 10kV / 10kA.

Fitter: Made of die cast A360.1 Aluminum alloy 0.100 (2.5mm) minimum thickness, the fitter is complete with a watertight access door giving access to the driver rated IP66, and a terminal block that accepts (#2 max.) wires from the primary circuit. Comes with an easy self adjusting system with two (2) set screws 3/8 16 UNC for ease of maintenance and installation. Fits on a 4"(102mm) outside diameter by 4"(102mm) long tenon.

Luminaire Options: (RCD7), Receptacle with 5 pins enabling dimming, can be used with a twist-lock control device or photoelectric cell or a shorting cap. Use of photocell or shorting cap is required to ensure proper illumination. **(MPTC-016)** RCD receptacle located on top of the fixture.

Miscellaneous

Description of Components:

Wiring: The connection of the luminaire is done using a terminal block connector 600V, 85A for use with bare son (#2 max.) wires from the primary circuit, located inside the fitter.

Hardware: All exposed screws shall be complete with Ceramic primer-seal basecoat to reduce seizing of the parts and offers a high resistance to corrosion. All seals and sealing devices are made and/or lined with EPDM and/or silicone and/or rubber.

Finish: Color to be **medium grey textured (GY3TX)** and in accordance with the AAMA 2603 standard. Application of polyester powder coat paint (4 mils/100 microns) with ± 1 mils/24 microns of tolerance. The Thermosetting resins provides a discoloration resistant finish in accordance with the ASTM D2244 standard, as well as luster retention in keeping with the ASTM D523 standard and humidity proof in accordance with the ASTM D2247 standard.

The surface treatment achieves a minimum of 2000 hours for salt spray resistant finish in accordance with testing performed and per ASTM B117 standard.

Warning: Please notice that most of our products are made from parts that need a tooling. A period of **5 years** without usage leads to obsolescence of the tooling. In doubt please validate with the factory if the toolings still are available.

LED products manufacturing standard: The electronic components sensitive to electrostatic discharge (ESD) such as light emitting diodes (LEDs) are assembled in compliance with IEC61340-5-1 and ANSI/ESD S20.20 standards so as to eliminate ESD events that could decrease the useful life of the product.

Quality Control: The manufacturer must provide a written confirmation of its ISO 9001-2008 and ISO 14001-2004 International Quality Standards Certification.

Vibration Resistance: The MPTC meets the **ANSI C136.31**, American National Standard for Roadway Luminaire Vibration specifications for Bridge/overpass applications. (Tested for 3G over 100 000 cycles)

Web site information details: Click on any specific information details you need:

Paint finish / Warranties / Installation pictures / ISO 9001-2008 Certification / ISO 14001-2004 Certification / cULus Certification

LED light engine technical information for MPTC and MPTR

LED = Philips Lumileds Luxeon T, CRI = 70, CCT = 4000K (+/- 350K)

System (LED + driver) rated life = 100,000 hrs [1] / 90,000 hrs [2]

LED Module	Typical delivered lumens	Typical system wattage [3] (W)	Typical current @ 120 V (A)	Typical current @ 208 V (A)	Typical current @ 240 V (A)	Typical current @ 277 V (A)	LED current (mA)	HID equivalent [4]	Luminaire Efficacy Rating (Lm/W)	BUG rating
16W16LED4K-T-LE3	1691	20	0.17	0.11	0.10	0.09	350	50-70	84.6	B0-U0-G0
16W16LED4K-T-LE2	1704	20	0.17	0.11	0.10	0.09	350	50-70	85.2	B1-U0-G0
16W16LED4K-T-LE3W	1704	20	0.17	0.11	0.10	0.09	350	50-70	85.2	B0-U0-G1
16W16LED4K-T-LE4	1704	20	0.17	0.11	0.10	0.09	350	50-70	85.2	B0-U0-G0
16W16LED4K-T-LE5	1704	20	0.17	0.11	0.10	0.09	350	50-70	85.2	B1-U0-G0
24W16LED4K-T-LE2	2363	29	0.25	0.15	0.13	0.12	530	70-100	81.5	B1-U0-G1
24W16LED4K-T-LE3	2363	29	0.25	0.15	0.13	0.12	530	70-100	81.5	B1-U0-G1
24W16LED4K-T-LE3W	2363	29	0.25	0.15	0.13	0.12	530	70-100	81.5	B1-U0-G1
24W16LED4K-T-LE4	2363	29	0.25	0.15	0.13	0.12	530	70-100	81.5	B1-U0-G1
24W16LED4K-T-LE5	2363	29	0.25	0.15	0.13	0.12	530	70-100	81.5	B2-U0-G1
30W16LED4K-T-LE3	2979	38	0.32	0.19	0.17	0.15	700	70-100	78.4	B1-U0-G1
30W16LED4K-T-LE2	3000	38	0.32	0.19	0.17	0.15	700	70-100	78.9	B1-U0-G1
30W16LED4K-T-LE3W	3000	38	0.32	0.19	0.17	0.15	700	70-100	78.9	B1-U0-G1
30W16LED4K-T-LE4	3000	38	0.32	0.19	0.17	0.15	700	70-100	78.9	B1-U0-G1
30W16LED4K-T-LE5	3000	38	0.32	0.19	0.17	0.15	700	70-100	78.9	B2-U0-G1
35W32LED4K-T-LE2	3318	37	0.31	0.19	0.17	0.16	350	70-100	89.7	B1-U0-G1
35W32LED4K-T-LE3W	3318	37	0.31	0.19	0.17	0.16	350	70-100	89.7	B1-U0-G1
35W32LED4K-T-LE4	3318	37	0.31	0.19	0.17	0.16	350	70-100	89.7	B1-U0-G1
35W32LED4K-T-LE5	3318	37	0.31	0.19	0.17	0.16	350	70-100	89.7	B2-U0-G1
35W32LED4K-T-LE3	3318	37	0.31	0.19	0.17	0.16	350	70-100	89.7	B1-U0-G1
48W16LED4K-T-LE3	4036	55	0.47	0.26	0.23	0.20	1050	70-100	73.4	B1-U0-G1
48W16LED4K-T-LE2	4068	55	0.47	0.26	0.23	0.20	1050	70-100	74.0	B1-U0-G1
48W16LED4K-T-LE3W	4068	55	0.47	0.26	0.23	0.20	1050	70-100	74.0	B1-U0-G1
48W16LED4K-T-LE4	4068	55	0.47	0.26	0.23	0.20	1050	70-100	74.0	B1-U0-G1
48W16LED4K-T-LE5	4068	55	0.47	0.26	0.23	0.20	1050	70-100	74.0	B3-U0-G1
55W32LED4K-T-LE2	4602	55	0.47	0.27	0.24	0.22	530	100-150	83.7	B1-U0-G1
55W32LED4K-T-LE3	4602	55	0.47	0.27	0.24	0.22	530	100-150	83.7	B1-U0-G1
55W32LED4K-T-LE3W	4602	55	0.47	0.27	0.24	0.22	530	100-150	83.7	B1-U0-G1
55W32LED4K-T-LE4	4602	55	0.47	0.27	0.24	0.22	530	100-150	83.7	B1-U0-G1
55W32LED4K-T-LE5	4602	55	0.47	0.27	0.24	0.22	530	100-150	83.7	B3-U0-G1
55W48LED4K-T-LE3	4946	55	0.46	0.28	0.26	0.24	350	100-150	89.9	B1-U0-G1
55W48LED4K-T-LE2	4954	55	0.46	0.28	0.26	0.24	350	100-150	90.1	B1-U0-G1
55W48LED4K-T-LE3W	4954	55	0.46	0.28	0.26	0.24	350	100-150	90.1	B1-U0-G1
55W48LED4K-T-LE4	4954	55	0.46	0.28	0.26	0.24	350	100-150	90.1	B1-U0-G1
55W48LED4K-T-LE5	4954	55	0.46	0.28	0.26	0.24	350	100-150	90.1	B3-U0-G1
72W32LED4K-T-LE2	5840	73	0.62	0.36	0.31	0.28	700	100-150	80.0	B1-U0-G1
72W32LED4K-T-LE3W	5840	73	0.62	0.36	0.31	0.28	700	100-150	80.0	B1-U0-G2
72W32LED4K-T-LE4	5840	73	0.616	0.356	0.313	0.28	700	100-150	80.0	B1-U0-G1
72W32LED4K-T-LE5	5840	73	0.616	0.356	0.313	0.28	700	100-150	80.0	B3-U0-G1
72W32LED4K-T-LE3	5844	73	0.616	0.356	0.313	0.28	700	100-150	80.1	B1-U0-G1

[1] L70 = 100,000 hrs (at ambient temperature = 25°C and forward current = 700 mA)

[2] L70 = 90,000 hrs (at ambient temperature = 25°C and forward current = 1050 mA)

[3] System wattage includes the lamp and the LED driver. [4] Equivalence should always be confirmed by a photometric layout

Note : Due to rapid and continuous advances in LED technology, LED luminaire data is subject to change without notice and at the discretion of Philips.

PHILIPS
LUMEC

LED light engine technical information for MPTC and MPTR

LED = Philips Lumileds Luxeon T, CRI = 70, CCT = 4000K (+/- 350K)

System (LED + driver) rated life = 100,000 hrs [1] / 90,000 hrs [2]

LED Module	Typical delivered lumens	Typical system wattage [3] (W)	Typical current @ 120 V (A)	Typical current @ 208 V (A)	Typical current @ 240 V (A)	Typical current @ 277 V (A)	LED current (mA)	HID equivalent [4]	Luminaire Efficacy Rating (Lm/W)	BUG rating
70W64LED4K-T-LE2	6624	73	0.609	0.362	0.322	0.292	350	100-150	90.7	B1-U0-G1
70W64LED4K-T-LE3	6624	73	0.609	0.362	0.322	0.292	350	100-150	90.7	B1-U0-G2
70W64LED4K-T-LE3W	6624	73	0.609	0.362	0.322	0.292	350	100-150	90.7	B1-U0-G2
70W64LED4K-T-LE4	6624	73	0.609	0.362	0.322	0.292	350	100-150	90.7	B1-U0-G2
70W64LED4K-T-LE5	6624	73	0.609	0.362	0.322	0.292	350	100-150	90.7	B3-U0-G2
80W48LED4K-T-LE3	6859	81	0.68	0.40	0.35	0.319	530	150-200	84.7	B1-U0-G2
80W48LED4K-T-LE2	6863	81	0.68	0.40	0.35	0.319	530	150-200	84.7	B1-U0-G1
80W48LED4K-T-LE3W	6863	81	0.68	0.40	0.35	0.319	530	150-200	84.7	B1-U0-G2
80W48LED4K-T-LE4	6863	81	0.68	0.40	0.35	0.319	530	150-200	84.7	B1-U0-G2
80W48LED4K-T-LE5	6863	81	0.675	0.399	0.353	0.319	530	150-200	84.7	B3-U0-G2
97W32LED4K-T-LE3	7919	110	0.92	0.533	0.468	0.414	1050	150-200	72.0	B1-U0-G2
97W32LED4K-T-LE2	7920	110	0.92	0.533	0.468	0.414	1050	150-200	72.0	B2-U0-G1
97W32LED4K-T-LE3W	7920	110	0.92	0.533	0.468	0.414	1050	150-200	72.0	B1-U0-G2
97W32LED4K-T-LE4	7920	110	0.92	0.533	0.468	0.414	1050	150-200	72.0	B1-U0-G2
97W32LED4K-T-LE5	7920	110	0.92	0.533	0.468	0.414	1050	150-200	72.0	B3-U0-G2
90W80LED4K-T-LE2	8204	86	0.726	0.429	0.382	0.347	350	150-200	95.4	B2-U0-G1
90W80LED4K-T-LE3	8204	86	0.726	0.429	0.382	0.347	350	150-200	95.4	B1-U0-G2
90W80LED4K-T-LE3W	8204	86	0.726	0.429	0.382	0.347	350	150-200	95.4	B2-U0-G2
90W80LED4K-T-LE4	8204	86	0.726	0.429	0.382	0.347	350	150-200	95.4	B1-U0-G2
90W80LED4K-T-LE5	8204	86	0.726	0.429	0.382	0.347	350	150-200	95.4	B3-U0-G2
108W48LED4K-T-LE2	8715	107	0.896	0.519	0.457	0.407	700	200-250	81.4	B2-U0-G2
108W48LED4K-T-LE3W	8715	107	0.896	0.519	0.457	0.407	700	200-250	81.4	B2-U0-G2
108W48LED4K-T-LE4	8715	107	0.896	0.519	0.457	0.407	700	200-250	81.4	B1-U0-G2
108W48LED4K-T-LE5	8715	107	0.896	0.519	0.457	0.407	700	200-250	81.4	B3-U0-G2
108W48LED4K-T-LE3	8719	107	0.896	0.519	0.457	0.407	700	200-250	81.5	B1-U0-G2
110W64LED4K-T-LE3	9167	105	0.879	0.512	0.449	0.4	530	200-250	87.3	B2-U0-G2
110W64LED4K-T-LE2	9169	105	0.879	0.512	0.449	0.4	530	200-250	87.3	B2-U0-G2
110W64LED4K-T-LE3W	9169	105	0.879	0.512	0.449	0.4	530	200-250	87.3	B2-U0-G2
110W64LED4K-T-LE4	9169	105	0.879	0.512	0.449	0.4	530	200-250	87.3	B2-U0-G2
110W64LED4K-T-LE5	9169	105	0.879	0.512	0.449	0.4	530	200-250	87.3	B3-U0-G2
135W80LED4K-T-LE2	11313	132	1.105	0.639	0.561	0.498	530	250-320	85.7	B2-U0-G2
135W80LED4K-T-LE3	11362	132	1.105	0.639	0.561	0.498	530	250-320	86.1	B2-U0-G2
135W80LED4K-T-LE4	11362	132	1.105	0.639	0.561	0.498	530	250-320	86.1	B2-U0-G2
135W80LED4K-T-LE3W	11769	132	1.105	0.639	0.561	0.498	530	250-320	89.2	B2-U0-G2
140W48LED4K-T-LE3	11803	162	1.355	0.772	0.672	0.589	1050	250-320	72.9	B2-U0-G2
140W48LED4K-T-LE2	11806	162	1.355	0.772	0.672	0.589	1050	250-320	72.9	B2-U0-G2
140W48LED4K-T-LE3W	11806	162	1.355	0.772	0.672	0.589	1050	250-320	72.9	B2-U0-G2
140W48LED4K-T-LE4	11806	162	1.355	0.772	0.672	0.589	1050	250-320	72.9	B2-U0-G2
140W48LED4K-T-LE5	11806	162	1.355	0.772	0.672	0.589	1050	250-320	72.9	B4-U0-G2
135W80LED4K-T-LE5	11817	132	1.105	0.639	0.561	0.498	530	250-320	89.5	B4-U0-G2

[1] L70 = 100,000 hrs (at ambient temperature = 25°C and forward current = 700 mA)

[2] L70 = 90,000 hrs (at ambient temperature = 25°C and forward current = 1050 mA)

[3] System wattage includes the lamp and the LED driver. [4] Equivalence should always be confirmed by a photometric layout

Note : Due to rapid and continuous advances in LED technology, LED luminaire data is subject to change without notice and at the discretion of Philips.

PHILIPS
LUMEC

City of San Francisco Lumec UrbanScape (3000K, roof mounted RCD7 receptecle control ready)
(73 watt, LE2 distribution, 150hps replacement)

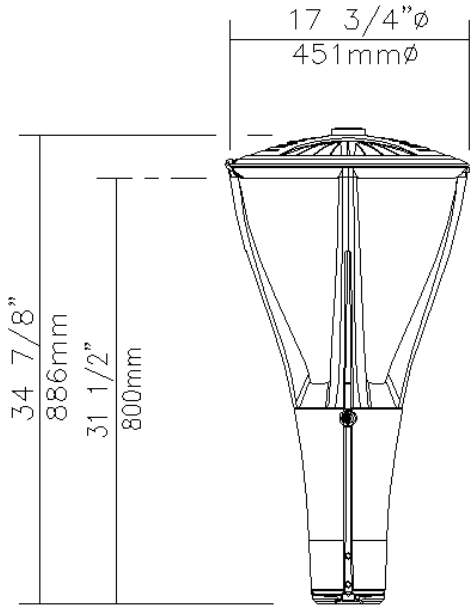

EPA: 1.698 sq ft / weight: 32.2 lb (14.6 kg)
Note: 3D image may not represent color or option selected.
Logos above include link, click to access.

Qty	Luminaire	**[MPTC-016]-70W64LED3K-G2-LE2-UNIV- RCD7-GY3TX**

Description of Components:

Hood: Made of die cast A360.1 Aluminum alloy 0.100 (2.5mm) minimum thickness, mechanically assembled to the cast aluminum heat sink.

Guard: In a round shape with 4 arms and a built-in mechanical ring, this guard is a one piece die cast A360 Aluminum alloy 0.100 (2.5mm) minimum thickness, mechanically assembled to the fitter.

Access-Mechanism: A die cast A360.1 Aluminum alloy 0.100 (2.5mm) minimum thickness technical ring with latch and hinge.

Light Engine: LEDgine composed of 4 main components: **Heat Sink / LED Module / Optical System / Driver**
Electrical components are RoHS compliant. Maximum ambient operating temperature up to 40C(104F) degrees.

Heat Sink: Made of cast aluminum optimising the LEDs efficiency and life. Product does not use any cooling device with moving parts (only passive cooling device).

Lens: Made of soda-lime tempered glass lens, mechanically assembled and sealed onto the ring of the access mechanism.

LED Module: Composed of 64 high-performance white LEDs. Color temperature as per ANSI/NEMA bin Warm White, 3000 Kelvin, CRI 70 Min. 75 Typical.

Optical System: (LE2), IES type 2 (assymmetrical). Composed of high-performance optical polymer refractor lenses to achieve desired distribution optimized to get maximum spacing, target lumens and a superior lighting uniformity. System is

rated IP66. Performance shall be tested per LM-63, LM-79 and TM-15 (IESNA) certifying its photometric performance. Street side indicated. Dark Sky compliant with 0% uplight and U0 per IESNA TM-15.

Driver: High power factor of 90% minimum. Electronic driver, operating range 50/60 Hz. **Auto-adjusting universal voltage input from 120 to 277 VAC rated for both application line to line or line to neutral, Class I**, THD of 20% max. Maximum ambient operating temperature from -40F(-40C) to 130F(55C) degrees.Assembled on a unitized removable tray with Tyco quick disconnect plug resisting to 221F(105C) degrees. **Driver comes with dimming compatible 0-10 volts.**

The current supplying the LEDs will be reduced by the driver if the driver experiences internal overheating as a protection to the LEDs and the electrical components. Output is protected from short circuits, voltage overload and current overload. Automatic recovery after correction. Standard built-in driver surge protection of 2.5kV (min).

Surge Protector: Surge protector tested in accordance with ANSI/IEEE C62.45 per ANSI/IEEE C62.41.2 Scenario I Category C High Exposure 10kV/10kA waveforms for Line-Ground, Line-Neutral and Neutral-Ground, and in accordance with U.S. DOE (Department of Energy) MSSLC (Municipal Solid-State Street Lighting Consortium) model specification for LED roadway luminaires electrical immunity requirements for High Test Level 10kV / 10kA.

Fitter: Made of die cast A360.1 Aluminum alloy 0.100 (2.5mm) minimum thickness, the fitter is complete with a watertight access door giving access to the driver rated IP66, and a terminal block that accepts (#2 max.) wires from the primary circuit. Comes with an easy self adjusting system with two (2) set screws 3/8 16 UNC for ease of maintenance and installation. Fits on a 4"(102mm) outside diameter by 4"(102mm) long tenon.

Luminaire Options: (RCD7), Receptacle with 5 pins enabling dimming, can be used with a twist-lock control device or photoelectric cell or a shorting cap. Use of photocell or shorting cap is required to ensure proper illumination. **(MPTC-016)** RCD receptacle located on top of the fixture.

Miscellaneous

Description of Components:

Wiring: The connection of the luminaire is done using a terminal block connector 600V, 85A for use with bare son (#2 max.) wires from the primary circuit, located inside the fitter.

Hardware: All exposed screws shall be complete with Ceramic primer-seal basecoat to reduce seizing of the parts and offers a high resistance to corrosion. All seals and sealing devices are made and/or lined with EPDM and/or silicone and/or rubber.

Finish: Color to be **medium grey textured (GY3TX)** and in accordance with the AAMA 2603 standard. Application of polyester powder coat paint (4 mils/100 microns) with ± 1 mils/24 microns of tolerance. The Thermosetting resins provides a discoloration resistant finish in accordance with the ASTM D2244 standard, as well as luster retention in keeping with the ASTM D523 standard and humidity proof in accordance with the ASTM D2247 standard.

The surface treatment achieves a minimum of 2000 hours for salt spray resistant finish in accordance with testing performed and per ASTM B117 standard.

Warning: Please notice that most of our products are made from parts that need a tooling. A period of **5 years** without usage leads to obsolescence of the tooling. In doubt please validate with the factory if the toolings still are available.

LED products manufacturing standard: The electronic components sensitive to electrostatic discharge (ESD) such as light emitting diodes (LEDs) are assembled in compliance with IEC61340-5-1 and ANSI/ESD S20.20 standards so as to eliminate ESD events that could decrease the useful life of the product.

Quality Control: The manufacturer must provide a written confirmation of its ISO 9001-2008 and ISO 14001-2004 International Quality Standards Certification.

Vibration Resistance: The MPTC meets the **ANSI C136.31**, American National Standard for Roadway Luminaire Vibration specifications for Bridge/overpass applications. (Tested for 3G over 100 000 cycles)

Web site information details: Click on any specific information details you need:

Paint finish / Warranties / Installation pictures / ISO 9001-2008 Certification / ISO 14001-2004 Certification / cULus Certification

LED light engine technical information for MPTC and MPTR

LED = Philips Lumileds Luxeon T, CRI = 70, CCT = 4000K (+/- 350K)

System (LED + driver) rated life = 100,000 hrs [1] / 90,000 hrs [2]

LED Module	Typical delivered lumens	Typical system wattage [3] (W)	Typical current @ 120 V (A)	Typical current @ 208 V (A)	Typical current @ 240 V (A)	Typical current @ 277 V (A)	LED current (mA)	HID equivalent [4]	Luminaire Efficacy Rating (Lm/W)	BUG rating
16W16LED4K-T-LE3	1691	20	0.17	0.11	0.10	0.09	350	50-70	84.6	B0-U0-G0
16W16LED4K-T-LE2	1704	20	0.17	0.11	0.10	0.09	350	50-70	85.2	B1-U0-G0
16W16LED4K-T-LE3W	1704	20	0.17	0.11	0.10	0.09	350	50-70	85.2	B0-U0-G1
16W16LED4K-T-LE4	1704	20	0.17	0.11	0.10	0.09	350	50-70	85.2	B0-U0-G0
16W16LED4K-T-LE5	1704	20	0.17	0.11	0.10	0.09	350	50-70	85.2	B1-U0-G0
24W16LED4K-T-LE2	2363	29	0.25	0.15	0.13	0.12	530	70-100	81.5	B1-U0-G1
24W16LED4K-T-LE3	2363	29	0.25	0.15	0.13	0.12	530	70-100	81.5	B1-U0-G1
24W16LED4K-T-LE3W	2363	29	0.25	0.15	0.13	0.12	530	70-100	81.5	B1-U0-G1
24W16LED4K-T-LE4	2363	29	0.25	0.15	0.13	0.12	530	70-100	81.5	B1-U0-G1
24W16LED4K-T-LE5	2363	29	0.25	0.15	0.13	0.12	530	70-100	81.5	B2-U0-G1
30W16LED4K-T-LE3	2979	38	0.32	0.19	0.17	0.15	700	70-100	78.4	B1-U0-G1
30W16LED4K-T-LE2	3000	38	0.32	0.19	0.17	0.15	700	70-100	78.9	B1-U0-G1
30W16LED4K-T-LE3W	3000	38	0.32	0.19	0.17	0.15	700	70-100	78.9	B1-U0-G1
30W16LED4K-T-LE4	3000	38	0.32	0.19	0.17	0.15	700	70-100	78.9	B1-U0-G1
30W16LED4K-T-LE5	3000	38	0.32	0.19	0.17	0.15	700	70-100	78.9	B2-U0-G1
35W32LED4K-T-LE2	3318	37	0.31	0.19	0.17	0.16	350	70-100	89.7	B1-U0-G1
35W32LED4K-T-LE3W	3318	37	0.31	0.19	0.17	0.16	350	70-100	89.7	B1-U0-G1
35W32LED4K-T-LE4	3318	37	0.31	0.19	0.17	0.16	350	70-100	89.7	B1-U0-G1
35W32LED4K-T-LE5	3318	37	0.31	0.19	0.17	0.16	350	70-100	89.7	B2-U0-G1
35W32LED4K-T-LE3	3318	37	0.31	0.19	0.17	0.16	350	70-100	89.7	B1-U0-G1
48W16LED4K-T-LE3	4036	55	0.47	0.26	0.23	0.20	1050	70-100	73.4	B1-U0-G1
48W16LED4K-T-LE2	4068	55	0.47	0.26	0.23	0.20	1050	70-100	74.0	B1-U0-G1
48W16LED4K-T-LE3W	4068	55	0.47	0.26	0.23	0.20	1050	70-100	74.0	B1-U0-G1
48W16LED4K-T-LE4	4068	55	0.47	0.26	0.23	0.20	1050	70-100	74.0	B1-U0-G1
48W16LED4K-T-LE5	4068	55	0.47	0.26	0.23	0.20	1050	70-100	74.0	B3-U0-G1
55W32LED4K-T-LE2	4602	55	0.47	0.27	0.24	0.22	530	100-150	83.7	B1-U0-G1
55W32LED4K-T-LE3	4602	55	0.47	0.27	0.24	0.22	530	100-150	83.7	B1-U0-G1
55W32LED4K-T-LE3W	4602	55	0.47	0.27	0.24	0.22	530	100-150	83.7	B1-U0-G1
55W32LED4K-T-LE4	4602	55	0.47	0.27	0.24	0.22	530	100-150	83.7	B1-U0-G1
55W32LED4K-T-LE5	4602	55	0.47	0.27	0.24	0.22	530	100-150	83.7	B3-U0-G1
55W48LED4K-T-LE3	4946	55	0.46	0.28	0.26	0.24	350	100-150	89.9	B1-U0-G1
55W48LED4K-T-LE2	4954	55	0.46	0.28	0.26	0.24	350	100-150	90.1	B1-U0-G1
55W48LED4K-T-LE3W	4954	55	0.46	0.28	0.26	0.24	350	100-150	90.1	B1-U0-G1
55W48LED4K-T-LE4	4954	55	0.46	0.28	0.26	0.24	350	100-150	90.1	B1-U0-G1
55W48LED4K-T-LE5	4954	55	0.46	0.28	0.26	0.24	350	100-150	90.1	B3-U0-G1
72W32LED4K-T-LE2	5840	73	0.62	0.36	0.31	0.28	700	100-150	80.0	B1-U0-G1
72W32LED4K-T-LE3W	5840	73	0.62	0.36	0.31	0.28	700	100-150	80.0	B1-U0-G2
72W32LED4K-T-LE4	5840	73	0.616	0.356	0.313	0.28	700	100-150	80.0	B1-U0-G1
72W32LED4K-T-LE5	5840	73	0.616	0.356	0.313	0.28	700	100-150	80.0	B3-U0-G1
72W32LED4K-T-LE3	5844	73	0.616	0.356	0.313	0.28	700	100-150	80.1	B1-U0-G1

[1] L70 = 100,000 hrs (at ambient temperature = 25°C and forward current = 700 mA)

[2] L70 = 90,000 hrs (at ambient temperature = 25°C and forward current = 1050 mA)

[3] System wattage includes the lamp and the LED driver. [4] Equivalence should always be confirmed by a photometric layout

Note : Due to rapid and continuous advances in LED technology, LED luminaire data is subject to change without notice and at the discretion of Philips.

PHILIPS
LUMEC

LED light engine technical information for MPTC and MPTR

LED = Philips Lumileds Luxeon T, CRI = 70, CCT = 4000K (+/- 350K)

System (LED + driver) rated life = 100,000 hrs [1] / 90,000 hrs [2]

LED Module	Typical delivered lumens	Typical system wattage [3] (W)	Typical current @ 120 V (A)	Typical current @ 208 V (A)	Typical current @ 240 V (A)	Typical current @ 277 V (A)	LED current (mA)	HID equivalent [4]	Luminaire Efficacy Rating (Lm/W)	BUG rating
70W64LED4K-T-LE2	6624	73	0.609	0.362	0.322	0.292	350	100-150	90.7	B1-U0-G1
70W64LED4K-T-LE3	6624	73	0.609	0.362	0.322	0.292	350	100-150	90.7	B1-U0-G2
70W64LED4K-T-LE3W	6624	73	0.609	0.362	0.322	0.292	350	100-150	90.7	B1-U0-G2
70W64LED4K-T-LE4	6624	73	0.609	0.362	0.322	0.292	350	100-150	90.7	B1-U0-G2
70W64LED4K-T-LE5	6624	73	0.609	0.362	0.322	0.292	350	100-150	90.7	B3-U0-G2
80W48LED4K-T-LE3	6859	81	0.68	0.40	0.35	0.319	530	150-200	84.7	B1-U0-G2
80W48LED4K-T-LE2	6863	81	0.68	0.40	0.35	0.319	530	150-200	84.7	B1-U0-G1
80W48LED4K-T-LE3W	6863	81	0.68	0.40	0.35	0.319	530	150-200	84.7	B1-U0-G2
80W48LED4K-T-LE4	6863	81	0.68	0.40	0.35	0.319	530	150-200	84.7	B1-U0-G2
80W48LED4K-T-LE5	6863	81	0.675	0.399	0.353	0.319	530	150-200	84.7	B3-U0-G2
97W32LED4K-T-LE3	7919	110	0.92	0.533	0.468	0.414	1050	150-200	72.0	B1-U0-G2
97W32LED4K-T-LE2	7920	110	0.92	0.533	0.468	0.414	1050	150-200	72.0	B2-U0-G1
97W32LED4K-T-LE3W	7920	110	0.92	0.533	0.468	0.414	1050	150-200	72.0	B1-U0-G2
97W32LED4K-T-LE4	7920	110	0.92	0.533	0.468	0.414	1050	150-200	72.0	B1-U0-G2
97W32LED4K-T-LE5	7920	110	0.92	0.533	0.468	0.414	1050	150-200	72.0	B3-U0-G2
90W80LED4K-T-LE2	8204	86	0.726	0.429	0.382	0.347	350	150-200	95.4	B2-U0-G1
90W80LED4K-T-LE3	8204	86	0.726	0.429	0.382	0.347	350	150-200	95.4	B1-U0-G2
90W80LED4K-T-LE3W	8204	86	0.726	0.429	0.382	0.347	350	150-200	95.4	B2-U0-G2
90W80LED4K-T-LE4	8204	86	0.726	0.429	0.382	0.347	350	150-200	95.4	B1-U0-G2
90W80LED4K-T-LE5	8204	86	0.726	0.429	0.382	0.347	350	150-200	95.4	B3-U0-G2
108W48LED4K-T-LE2	8715	107	0.896	0.519	0.457	0.407	700	200-250	81.4	B2-U0-G2
108W48LED4K-T-LE3W	8715	107	0.896	0.519	0.457	0.407	700	200-250	81.4	B2-U0-G2
108W48LED4K-T-LE4	8715	107	0.896	0.519	0.457	0.407	700	200-250	81.4	B1-U0-G2
108W48LED4K-T-LE5	8715	107	0.896	0.519	0.457	0.407	700	200-250	81.4	B3-U0-G2
108W48LED4K-T-LE3	8719	107	0.896	0.519	0.457	0.407	700	200-250	81.5	B1-U0-G2
110W64LED4K-T-LE3	9167	105	0.879	0.512	0.449	0.4	530	200-250	87.3	B2-U0-G2
110W64LED4K-T-LE2	9169	105	0.879	0.512	0.449	0.4	530	200-250	87.3	B2-U0-G2
110W64LED4K-T-LE3W	9169	105	0.879	0.512	0.449	0.4	530	200-250	87.3	B2-U0-G2
110W64LED4K-T-LE4	9169	105	0.879	0.512	0.449	0.4	530	200-250	87.3	B2-U0-G2
110W64LED4K-T-LE5	9169	105	0.879	0.512	0.449	0.4	530	200-250	87.3	B3-U0-G2
135W80LED4K-T-LE2	11313	132	1.105	0.639	0.561	0.498	530	250-320	85.7	B2-U0-G2
135W80LED4K-T-LE3	11362	132	1.105	0.639	0.561	0.498	530	250-320	86.1	B2-U0-G2
135W80LED4K-T-LE4	11362	132	1.105	0.639	0.561	0.498	530	250-320	86.1	B2-U0-G2
135W80LED4K-T-LE3W	11769	132	1.105	0.639	0.561	0.498	530	250-320	89.2	B2-U0-G2
140W48LED4K-T-LE3	11803	162	1.355	0.772	0.672	0.589	1050	250-320	72.9	B2-U0-G2
140W48LED4K-T-LE2	11806	162	1.355	0.772	0.672	0.589	1050	250-320	72.9	B2-U0-G2
140W48LED4K-T-LE3W	11806	162	1.355	0.772	0.672	0.589	1050	250-320	72.9	B2-U0-G2
140W48LED4K-T-LE4	11806	162	1.355	0.772	0.672	0.589	1050	250-320	72.9	B2-U0-G2
140W48LED4K-T-LE5	11806	162	1.355	0.772	0.672	0.589	1050	250-320	72.9	B4-U0-G2
135W80LED4K-T-LE5	11817	132	1.105	0.639	0.561	0.498	530	250-320	89.5	B4-U0-G2

[1] L70 = 100,000 hrs (at ambient temperature = 25°C and forward current = 700 mA)

[2] L70 = 90,000 hrs (at ambient temperature = 25°C and forward current = 1050 mA)

[3] System wattage includes the lamp and the LED driver. [4] Equivalence should always be confirmed by a photometric layout

Note : Due to rapid and continuous advances in LED technology, LED luminaire data is subject to change without notice and at the discretion of Philips.

PHILIPS
LUMEC

City of San Francisco – Lumec UrbanScape -comfort optic, type 3, FAWS w/ 75w,55w,35w,20w option

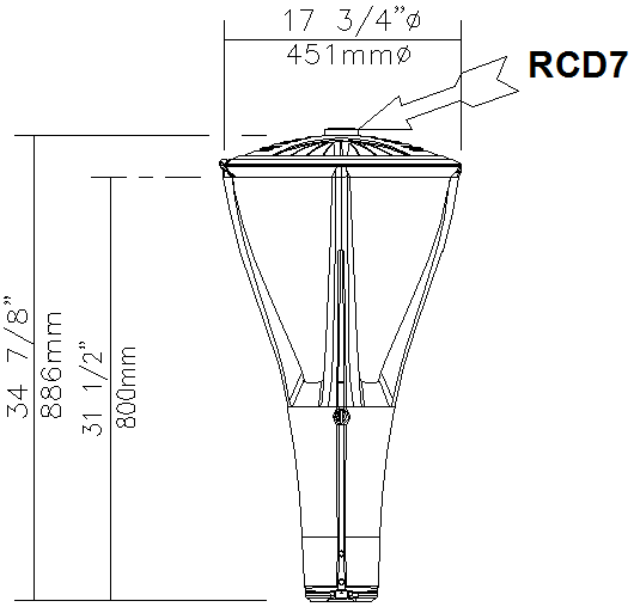

EPA: 1.698 sq ft / weight: 32.2 lb (14.6 kg)
Note: 3D image may not represent color or option selected.
Logos above include link, click to access.

Qty	Luminaire	**[MPTC-C-006]-140L1675WW-G1-3-UNV-DMG-[FAWS-069]-RCD7-GY3TX**

Description of Components:

Hood: Made of die cast A360.1 Aluminum alloy 0.100 (2.5mm) minimum thickness, mechanically assembled to the cast aluminum heat sink.

Guard: In a round shape with 4 arms and a built-in mechanical ring, this guard is a one-piece die cast A360 Aluminum alloy 0.100 (2.5mm) minimum thickness, mechanically assembled to the fitter.

Access-Mechanism: A die cast A360.1 Aluminum alloy 0.100 (2.5mm) minimum thickness technical ring with latch and hinge.

Light Engine: Light guide technology provides low-glare, uniform illumination. Composed of 140 LEDs strategically positioned on the edge of the optical plate. Light engine luminous opening size optimized to best achieve a balance between lumen output and optical performance with the need to provide visual comfort. Light engine frame ensures contact with housing to provide heat conduction and sealing against the elements. Light engine is RoHS compliant. Maximum ambient operating temperature up to 40C(104F) degrees.

LED Module: Composed of 140 high-performance white LEDs. Color temperature as per ANSI/NEMA bin Warm White, 3000 Kelvin nominal (3000K +/- 130K), CRI 70 Min.

Optical System: The advanced LED comfort optical system provides IES type III (asymmetrical) distribution. Composed of high performance UV-stabilized optical grade lens with molded micro-optics to achieve desired distribution optimized to get a exceptional lighting uniformity. System is rated IP66. Performance tested per LM-79 and TM-15 (IESNA) certifying its photometric performance. Street side indicated.0% uplight and U0 per IESNA TM-15.

Driver: High power factor of 95% min. Electronic driver, operating range 50/60 Hz. Auto-adjusting universal voltage input from 120 to 277 VAC rated for both application line to line or line to neutral, Class 2, THD of 20% max.Assembled on a unitized removable tray with Tyco quick disconnect plug resisting to 221F(105C) degrees. **Driver comes with dimming compatible 0-10 volts. RoHS compliant.**

The current supplying the LEDs will be reduced by the driver if the driver experiences internal overheating as a protection to the LEDs and the electrical components. Output is protected from short circuits, voltage overload and current overload. Automatic recovery after correction. Standard built-in driver surge protection of 6kV (min).

Driver Options: (DMG), Dimming compatible 0-10 volts. For applicable warranty, certification and operation guide see Lumec dimmable luminaire specification document for unapproved device installed by other. To get document, click on this link: Specification document or go on web site on this address: https://www.signify.com/b-dam/signify/en-us/brands/lumec/Lumec-un-approved-control-device-installed-by-others-7_d.pdf

Surge Protector: Surge protector tested in accordance with ANSI/IEEE C62.45 per ANSI/IEEE C62.41.2 Scenario I Category C High Exposure 10kV/10kA waveforms for Line-Ground, Line-Neutral and Neutral-Ground, and in accordance with U.S. DOE (Department of Energy) MSSLC (Municipal Solid-State Street Lighting Consortium) model specification for LED roadway luminaires electrical immunity requirements for High Test Level 10kV / 10kA.

Fitter: Made of die cast A360.1 Aluminum alloy 0.100 (2.5mm) minimum thickness, the fitter is complete with a watertight tool-free access door giving access to the driver rated IP66, and a terminal block that accepts (#2 max.) wires from the primary circuit. Comes with an easy self adjusting system with two (2) set screws 3/8 16 UNC for ease of maintenance and installation. Fits on a 4"(102mm) outside diameter by 4"(102mm) long tenon.

Luminaire Options: (FAWS-069), Field Adjustable Wattage Selector, pre-set to the highest position, can be easily switched in the field to the required position. This reduces total luminaire wattage consumption and reduces the light level. Note: It is not recommended to use FAWS with other dimming or controls; if you do, set the switch to position 4 (maximum output) to enable the other dimming or controls. Switching FAWS to any position other than 4 will disable the other dimming or controls.

Use the FAWS at: position 4 to obtain 75W, position 3 to obtain 55W, position 2 to obtain 35W and position 1 to obtain 20W. (RCD7), Receptacle with 7 pins enabling dimming and with two extra connections for future use (these connections are capped off at the factory - requires connections to be made in the field), can be used with a twist-lock control device or photoelectric cell or a shorting cap. Use of photocell or shorting cap is required to ensure proper illumination.

Miscellaneous

Description of Components:

Wiring: The connection of the luminaire is done using a terminal block connector 600V, 85A for use with bare son (#2 max.) wires from the primary circuit, located inside the fitter.

Hardware: All exposed screws shall be complete with Ceramic primer-seal basecoat to reduce seizing of the parts and offers a high resistance to corrosion. All seals and sealing devices are made and/or lined with EPDM and/or silicone and/or rubber.

Finish: Color to be **medium grey textured (GY3TX)** and in accordance with the AAMA 2603 standard. Application of polyester powder coat paint (4 mils/100 microns) with ± 1 mils/24 microns of tolerance. The Thermosetting resins provides a discoloration resistant finish in accordance with the ASTM D2244 standard, as well as luster retention in keeping with the ASTM D523 standard and humidity proof in accordance with the ASTM D2247 standard.

The surface treatment achieves a minimum of 2000 hours for salt spray resistant finish in accordance with testing performed and per ASTM B117 standard.

LED products manufacturing standard: The electronic components sensitive to electrostatic discharge (ESD) such as light emitting diodes (LEDs) are assembled in compliance with IEC61340-5-1 and ANSI/ESD S20.20 standards so as to eliminate ESD events that could decrease the useful life of the product.

Quality Control: The manufacturer must provide a written confirmation of its ISO 9001-2008 and ISO 14001-2004 International Quality Standards Certification.

Vibration Resistance: The MPTC-C meets the **ANSI C136.31, 2010**, American National Standard for Roadway Luminaire Vibration specifications for Bridge/overpass applications. (Tested for 3G over 100 000 cycles)

Web site information details: / cULus Certification

LED Wattage and Lumen Values:

3000K				Type 1			Type 2			Type 3			Type 4			Type 5		
Ordering Code	Total LEDs	LED current (mA)	Average system watts (W)	delivered lumens	Efficacy (LPW)	BUG rating	delivered lumens	Efficacy (LPW)	BUG rating	delivered lumens	Efficacy (LPW)	BUG rating	delivered lumens	Efficacy (LPW)	BUG rating	delivered lumens	Efficacy (LPW)	BUG rating
140L450WW-G1	140	450	22	1813	82	B1-U0-G1	1721	78	B1-U0-G1	1888	86	B1-U0-G1	1852	84	B1-U0-G1	1918	87	B1-U0-G1
140L650WW-G1	140	650	31	2597	84	B1-U0-G1	2465	80	B1-U0-G1	2704	87	B1-U0-G1	2653	86	B1-U0-G1	2747	89	B2-U0-G1
140L1150WW-G1	140	1150	51	4256	83	B2-U0-G2	4040	79	B2-U0-G2	4431	87	B2-U0-G2	4347	85	B1-U0-G1	4502	88	B2-U0-G1
140L1675WW-G1	140	1675	75	5964	80	B3-U0-G3	5662	75	B2-U0-G2	6209	83	B2-U0-G2	6092	81	B2-U0-G2	6310	84	B3-U0-G2
140L2100WW-G1	140	2100	95	7158	75	B3-U0-G3	6795	72	B3-U0-G3	7452	78	B3-U0-G3	7312	77	B2-U0-G2	7572	80	B3-U0-G2

4000K				Type 1			Type 2			Type 3			Type 4			Type 5		
Ordering Code	Total LEDs	LED current (mA)	Average system watts (W)	delivered lumens	Efficacy (LPW)	BUG rating	delivered lumens	Efficacy (LPW)	BUG rating	delivered lumens	Efficacy (LPW)	BUG rating	delivered lumens	Efficacy (LPW)	BUG rating	delivered lumens	Efficacy (LPW)	BUG rating
140L450NW-G1	140	450	22	1850	84	B1-U0-G1	1756	80	B1-U0-G1	1926	88	B1-U0-G1	1889	86	B1-U0-G1	1957	89	B1-U0-G1
140L650NW-G1	140	650	31	2649	85	B1-U0-G1	2515	81	B1-U0-G1	2758	89	B1-U0-G1	2706	87	B1-U0-G1	2802	90	B2-U0-G1
140L1150NW-G1	140	1150	51	4341	85	B2-U0-G2	4121	81	B2-U0-G2	4519	89	B2-U0-G2	4434	87	B2-U0-G2	4593	90	B3-U0-G1
140L1675NW-G1	140	1675	75	6084	81	B3-U0-G3	5775	77	B2-U0-G2	6334	84	B2-U0-G2	6214	83	B2-U0-G2	6436	86	B3-U0-G2
140L2100NW-G1	140	2100	95	7301	77	B3-U0-G3	6931	73	B3-U0-G3	7601	80	B3-U0-G3	7458	79	B2-U0-G2	7724	81	B3-U0-G2

Actual performance may vary due to installation variables including optics, mounting/ceiling height, dirt depreciation, light loss factor, etc.; highly recommended to confirm performance with a layout

- contact Applications at outdoorlighting.applications@philips.com. Consult DLC QPL to confirm your specific fixture selection is DLC approved.

Note: Some data may be scaled based on tests of similar but not identical luminaries.

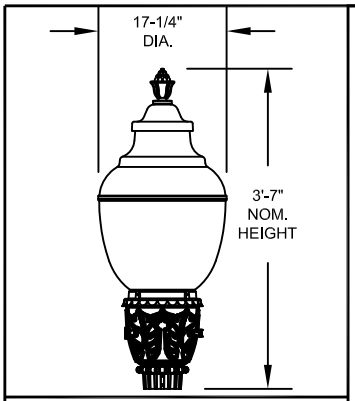

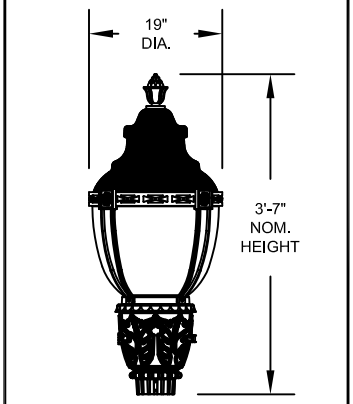

Maximum weight - 80 lbs
Maximum effective projected area - 2.26 sq. ft.

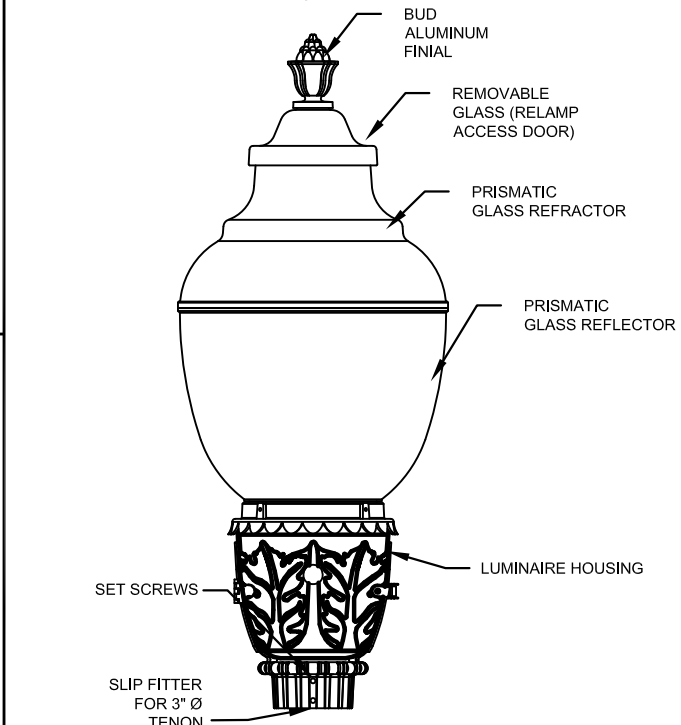

Washington Postlite Enhanced® LED Series Luminaire

Prismatic Style: Glass Washington Housing Size: Utility Washington

DECORATIVE OUTDOOR

HOLOPHANE®
LEADER IN LIGHTING SOLUTIONS
An AcuityBrandsCompany

ORDERING INFORMATION:

WSE2 [ ] [ ] [ ] [ ] [ ] [ ] [ ]

- HOUSING WSE2 = ENHANCED WASHINGTON POSTLITE LED
- LED PERFORMANCE PACKAGE (SEE PRODUCT COMPATIBILITY TABLE FOR OPTIONS)
  - P10 = AS=26W / AH=33W
  - P20 = AS=39W / AH=49W
  - P30 = AS=60W / AH=68W
  - P40 = AS=81W / AH=90W
  - P50 = AS=100W / AH=100W
- COLOR TEMPERATURE
  - 30K = 3000 K CCT
  - 40K = 4000 K CCT
  - 50K = 5000 K CCT
- VOLTAGE
  - AS = AUTO-SENSING VOLTAGE (120 THRU 277 V)
  - AH[1] = AUTO-SENSING VOLTAGE (347 THRU 480 V)
- HOUSING COLORS
  - BK = BLACK
  - BZ = BRONZE
  - GH = GRAPHITE
  - GN = GREEN
  - GR = GREY
  - PP = PRIME PAINT
  - WH = WHITE
  - CMC = CUSTOM MATCH COLOR
  - TDC = TIGER DRYLAC COLOR (RALxxx)
  - XX = STD FINISH, TBD
- OPTICS
  - 3 = IES TYPE III DISTRIBUTION
  - 5 = IES TYPE V DISTRIBUTION
- TRIM / FINIAL COLORS
  - BK = BLACK
  - BZ = BRONZE
  - GL = GOLD
  - GH = GRAPHITE
  - GN = GREEN
  - GR = GREY
  - PP = PRIME PAINT
  - WH = WHITE
  - CMC = CUSTOM MATCH COLOR
  - TDC = TIGER DRYLAC COLOR (RALxxx)
  - XX = STD FINISH, TBD
- DECORATIVE TRIM
  - 1 = BAND, MEDALLIONS & BUD FINIAL
  - 2 = BAND, MEDALLIONS & SPIKE FINIAL
  - 3 = BUD FINIAL
  - 4 = SPIKE FINIAL
  - 5 = BUD FINIAL, BAND & RIBS
  - 6 = SPIKE FINIAL, BAND & RIBS
  - 7 = BAND, MEDALLIONS & ORNATE FINIAL
  - 8 = ORNATE FINIAL
  - 9 = ORNATE FINIAL, BAND & RIBS

[ ] [ ]

OPTIONS

CONTROL OPTIONS

- AO[2] = FIELD ADJUSTABLE OUTPUT
- DE[3] = ROAM 0-10V DIMMING CONTROL, INCLUDES NEMA TWISTLOCK PHOTOCONTROL RECEPTACLE
- FPDxx[4] = FACTORY PROGRAMMED DRIVER (xx = % OF LUMENS OR WATTS)
- H[5] = NEMA TWISTLOCK PHOTOCONTROL (PC) RECEPTACLE - 3 PIN
- P5[6] = DIMMING PC RECEPTACLE - 5 PIN
- P7[7] = DIMMING PC RECEPTACLE - 7 PIN
- P34[8] = 347V DTL TWISTLOCK PHOTOCONTROL
- P48[9] = 480V DTL TWISTLOCK PHOTOCONTROL
- PCLL[10] = LONG LIFE DTL TWISTLOCK PHOTOCONTROL FOR SOLID STATE
- PCS[11] = DTL TWISTLOCK PHOTOCONTROL FOR SOLID STATE
- PND[12] = 0-10V PART-NIGHT DIMMING, INCLUDES BLC2 & NEMA TWISTLOCK PHOTOCONTROL RECEPTACLE
- PSC[13] = SHORTING CAP

COVER OPTIONS

- F[14] = FULL COVER
- S[15] = SHOREWOOD STYLE COVER

NEMA WATTAGE LABEL OPTIONS

- NL1X1 = 1 X 1 NEMA LABEL
- NL2X2 = 2 X 2 NEMA LABEL

PREWIRE LEAD OPTIONS

- L1H = 1.5 FEET OF PREWIRED LEADS
- L03 = 3 FEET OF PREWIRED LEADS
- L10 = 10 FEET OF PREWIRED LEADS
- L20 = 20 FEET OF PREWIRED LEADS
- L25 = 25 FEET OF PREWIRED LEADS
- L30 = 30 FEET OF PREWIRED LEADS

ACCESSORIES

HOUSE SIDE SHIELD OPTIONS

- WLEDHS90[16] = HOUSE SIDE SHIELD, 90 DEGREES
- WLEDHS12[16] = HOUSE SIDE SHIELD, 120 DEGREES
- WLEDHS18[16] = HOUSE SIDE SHIELD, 180 DEGREES
- WLEDHSS90[17] = HOUSE SIDE SHIELD, 90 DEGREES
- WLEDHSS12[17] = HOUSE SIDE SHIELD, 120 DEGREES
- WLEDHSS18[17] = HOUSE SIDE SHIELD, 180 DEGREES

NOTES ARE LOCATED ON PAGE 3

THIS DRAWING, WHEN APPROVED, SHALL BECOME THE COMPLETE SPECIFICATION FOR THE MATERIAL TO BE FURNISHED BY HOLOPHANE ON THE ORDER NOTED ABOVE, A UNIT OF SIMILAR DESIGN MAY BE SUPPLIED, BUT ONLY AFTER APPROVAL BY THE CUSTOMER IN WRITING. ON POLE ORDERS AN ANCHOR BOLT TEMPLATE PRINT WILL BE SUPPLIED WITH EACH ANCHOR BOLT ORDER TO MATCH THE POLE PROVIDED, THIS PRINT IS THE PROPERTY OF HOLOPHANE AND IS LOANED SUBJECT TO RETURN UPON DEMAND AND UPON EXPRESS CONDITION THAT IT WILL NOT BE USED DIRECTLY OR INDIRECTLY IN ANY WAY DETRIMENTAL TO OUR INTERESTS, AND ONLY IN CONNECTION WITH MATERIAL FURNISHED BY HOLOPHANE.

ORDER #:
TYPE:
DRAWN: RAF
DATE: 6-16-2016
DWG #: LUM_WSE2

©2009 ACUITY BRANDS LIGHTING INC., All Rights Reserved

Performance Data

AS Voltage Option Data

LED Package	Distribution	System Watts	30K (3000K, 70 CRI)					40K (4000K, 70 CRI)					50K (5000K, 70 CRI)				
			Lumens	LPW	B	U	G	Lumens	LPW	B	U	G	Lumens	LPW	B	U	G
P10	3	26	3,265	126	1	4	3	3,433	132	1	4	3	3,433	132	1	4	3
	5	26	3,026	116	2	3	2	3,182	122	2	4	2	3,182	122	2	4	2
P20	3	39	4,918	126	1	4	3	5,171	133	2	5	3	5,171	133	2	5	3
	5	39	4,558	117	3	4	3	4,792	123	3	4	3	4,792	123	3	4	3
P30	3	60	6,924	115	2	5	4	7,281	121	2	5	4	7,281	121	2	5	4
	5	60	6,417	107	3	5	3	6,748	112	3	5	3	6,748	112	3	5	3
P40	3	81	8,704	107	2	5	4	9,152	113	2	5	4	9,152	113	2	5	4
	5	81	8,067	100	3	5	3	8,483	105	3	5	3	8,483	105	3	5	3
P50	3	100	10,185	102	3	5	5	10,709	107	3	5	5	10,709	107	3	5	5
	5	100	9,439	94	3	5	4	9,925	99	4	5	4	9,925	99	4	5	4

AH Voltage Option Data

LED Package	Distribution	System Watts	30K (3000K, 70 CRI)					40K (4000K, 70 CRI)					50K (5000K, 70 CRI)				
			Lumens	LPW	B	U	G	Lumens	LPW	B	U	G	Lumens	LPW	B	U	G
P10	3	33	3,265	99	1	4	3	3,433	104	1	4	3	3,433	104	1	4	3
	5	33	3,026	92	2	3	2	3,182	96	2	4	2	3,182	96	2	4	2
P20	3	49	4,918	100	1	4	3	5,171	106	2	5	3	5,171	106	2	5	3
	5	49	4,558	93	3	4	3	4,792	98	3	4	3	4,792	98	3	4	3
P30	3	68	6,924	102	2	5	4	7,281	107	2	5	4	7,281	107	2	5	4
	5	68	6,417	94	3	5	3	6,748	99	3	5	3	6,748	99	3	5	3
P40	3	90	8,704	97	2	5	4	9,152	102	2	5	4	9,152	102	2	5	4
	5	90	8,067	90	3	5	3	8,483	94	3	5	3	8,483	94	3	5	3
P50	3	100	10,185	102	3	5	5	10,709	107	3	5	5	10,709	107	3	5	5
	5	100	9,439	94	3	5	4	9,925	99	4	5	4	9,925	99	4	5	4

FPDxx Data Table (Only Available With AS Option)

FPDxx setting	P10 30K	P10 40K	P10 50K
	Not Available	Not Available	Not Available

FPDxx setting	AS Wattage	P20 30K		P20 40K		P20 50K	
		3	5	3	5	3	5
Standard	39	4,918	4,558	5,171	4,792	5,171	4,792
FPD95	38	4,701	4,357	4,943	4,581	4,943	4,581
FPD90	36	4,481	4,153	4,711	4,366	4,711	4,366
FPD85	34	4,258	3,946	4,477	4,149	4,477	4,149
FPD80	32	4,032	3,737	4,239	3,928	4,239	3,928
FPD75	30	3,802	3,524	3,998	3,705	3,998	3,705

FPDxx setting	AS Wattage	P30 30K		P30 40K		P30 50K	
		3	5	3	5	3	5
Standard	60	6,924	6,417	7,281	6,748	7,281	6,748
FPD95	57	6,749	6,255	7,097	6,577	7,097	6,577
FPD90	54	6,552	6,072	6,890	6,385	6,890	6,385
FPD85	51	6,334	5,870	6,660	6,173	6,660	6,173
FPD80	48	6,095	5,649	6,409	5,940	6,409	5,940
FPD75	45	5,836	5,409	6,137	5,688	6,137	5,688

FPDxx setting	AS Wattage	P40 30K		P40 40K		P40 50K	
		3	5	3	5	3	5
Standard	81	8,704	8,067	9,152	8,483	9,152	8,483
FPD95	76	8,410	7,795	8,843	8,197	8,843	8,197
FPD90	72	8,100	7,507	8,517	7,894	8,517	7,894
FPD85	68	7,772	7,203	8,172	7,575	8,172	7,575
FPD80	64	7,427	6,883	7,809	7,238	7,809	7,238

FPDxx setting	AS Wattage	P50 30K		P50 40K		P50 50K	
		3	5	3	5	3	5
Standard	100	10,185	9,439	10,709	9,925	10,709	9,925
FPD95	95	9,927	9,200	10,438	9,674	10,438	9,674
FPD90	90	9,637	8,931	10,133	9,391	10,133	9,391
FPD85	85	9,317	8,634	9,796	9,079	9,796	9,079

Washington Postlite Enhanced® LED Series Luminaire

Prismatic Style: Glass Washington
Housing Size: Utility Washington

DECORATIVE OUTDOOR

HOLOPHANE®
LEADER IN LIGHTING SOLUTIONS
An AcuityBrandsCompany

© 2009 Acuity Brands Lighting, Inc. All Rights Reserved

THIS DRAWING, WHEN APPROVED, SHALL BECOME THE COMPLETE SPECIFICATION FOR THE MATERIAL TO BE FURNISHED BY HOLOPHANE ON THE ORDER NOTED ABOVE, A UNIT OF SIMILAR DESIGN MAY BE SUPPLIED, BUT ONLY AFTER APPROVAL BY THE CUSTOMER IN WRITING. ON POLE ORDERS AN ANCHOR BOLT TEMPLATE PRINT WILL BE SUPPLIED WITH EACH ANCHOR BOLT ORDER TO MATCH THE POLE PROVIDED. THIS PRINT IS THE PROPERTY OF HOLOPHANE AND IS LOANED SUBJECT TO RETURN UPON DEMAND AND UPON EXPRESS CONDITION THAT IT WILL NOT BE USED DIRECTLY OR INDIRECTLY IN ANY WAY DETRIMENTAL TO OUR INTERESTS, AND ONLY IN CONNECTION WITH MATERIAL FURNISHED BY HOLOPHANE.

ORDER #:
TYPE:
DRAWN: RAF
DATE: 6-16-2016
DWG #: LUM_WSE2

NOTES

1. Not available with "AO", "DE", "FPDXX", "PCLL", "PCS" or "PND".
2. Not available with "AH", "DE", "P5" ,"P7", "PCS" or "PND". Refer to instructions on website for details.
3. Not available with "AO", "AH", "H", "PCLL", "PCS", "PSC", "PND", "P5" or "P7".
4. Refer to the FPDxx Data Table for lumens and wattages options.
5. Photocontrol not included. "AS" (120-277) only. Not available with option "DE", "PND", "P5" or "P7".
6. Photocontrol not included. Not available with options "DE", "H", "PND" and "P7".
7. Photocontrol not included. Not available with options "DE", "H", "PND" and "P5".
8. Not available with "AS", "DE", "PCLL", "PCS", "PSC", "PND" or "P48". Must be used with "H", "P5" or 'P7".
9. Not available with "AS", "DE", "PCLL", "PCS", "PSC", "PND" or "P34". Must be used with "H", "P5" or 'P7".
10. Requires "H", "P5", "P7" or "PND". Not available with "AO", "PCS" or "PSC" options.
11. Available with "AS" voltage only. Requires "H", "P5", "P7" or "PND". Not available with "AO", "PCLL" or "PSC" options.
12. Available with "AS" voltage only. Not available with options "AO", "DE", "H", "P5" and "P7".
13. Requires "H", "P5" or "P7" option photocontrol receptacle or "PND" (includes photocontrol receptacle). Not available with "PCLL" or "PCS".
14. Not available with cover option "S".
15. Not available with cover option "F".
16. Only available with "P50".
17. Only available with "P10", "P20", "P30" and "P40".

Product Compatibility Table

WATTAGE TABLE		
LED PACKAGE	AS	AH
P10	26W	33W
P20	39W	49W
P30	60W	68W
P40	81W	90W
P50	100W	100W

Lumen Ambient Temperature (LAT) Multipliers

Use these factors to determine relative lumen output for average ambient temperatures from 0-40°C (32-104°F).

Average Lumen Ambient Temperature (LAT) Multipliers			
°C	°F	Lumen Multiplier	LED Packages
0	32	1.06	P10, P20, P30, P40, P50
5	41	1.05	
10	50	1.04	
15	59	1.03	
20	68	1.01	
25	**77**	**1.00**	
30	86	0.99	
35	95	0.97	
40	104	0.96	

Projected LED Lumen Maintenance

Data references the extrapolated performance projections for the platforms noted in a 25°C ambient, based on 10,000 hours of LED testing (tested per IESNA LM-80-08 and projected per IESNA TM-21-11).
To calculate LLF, use the lumen maintenance factor that corresponds to the desired number of operating hours below. For other lumen maintenance values, contact factory.

Lumen Maintenance - LLD (same for all LED packages)							
Hours	0	25,000	36,000	50,000	60,000	*75,000*	*100,000*
Factor	1	0.93	0.93	0.92	0.91	*0.9*	*0.89*

The italicized data is extrapolated beyond the TM-21 standard.

E = (LM) x (CU) x (LAT) x (LLD)
LM and CU are obtained from published photometry.

Washington Postlite Enhanced® LED Series Luminaire

Prismatic Style: Glass Washington
Housing Size: Utility Washington

DECORATIVE OUTDOOR

HOLOPHANE®
LEADER IN LIGHTING SOLUTIONS
An AcuityBrandsCompany

© 2009 Acuity Brands Lighting, Inc. All Rights Reserved

THIS DRAWING, WHEN APPROVED, SHALL BECOME THE COMPLETE SPECIFICATION FOR THE MATERIAL TO BE FURNISHED BY HOLOPHANE ON THE ORDER NOTED ABOVE, A UNIT OF SIMILAR DESIGN MAY BE SUPPLIED, BUT ONLY AFTER APPROVAL BY THE CUSTOMER IN WRITING. ON POLE ORDERS AN ANCHOR BOLT TEMPLATE PRINT WILL BE SUPPLIED WITH EACH ANCHOR BOLT ORDER TO MATCH THE POLE PROVIDED. THIS PRINT IS THE PROPERTY OF HOLOPHANE AND IS LOANED SUBJECT TO RETURN UPON DEMAND AND UPON EXPRESS CONDITION THAT IT WILL NOT BE USED DIRECTLY OR INDIRECTLY IN ANY WAY DETRIMENTAL TO OUR INTERESTS, AND ONLY IN CONNECTION WITH MATERIAL FURNISHED BY HOLOPHANE.

ORDER #:
TYPE:
DRAWN: RAF
DATE: 6-16-2016
DWG #: LUM_WSE2

Mark Appropriate Box for Trim Option

Cover

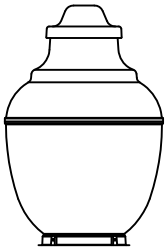

No Cover

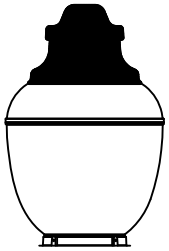

Shorewood Cover

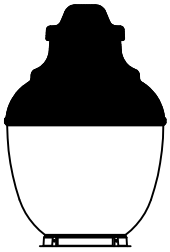

Full Cover

Medallions & Bands

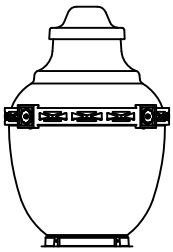

Medallions and Band

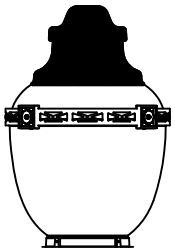

Medallions, Band, and Shorewood Cover

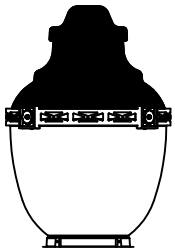

Medallions, Band, and Full Cover

Ribs & Bands

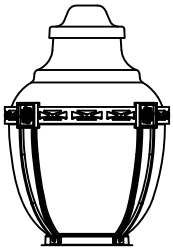

Ribs and Band

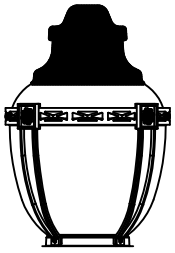

Ribs, Band, and Shorewood Cover

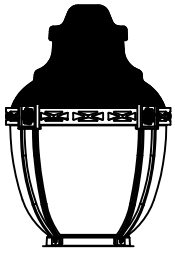

Ribs, Band, and Full Cover

Finial

Bud

Ornate

Spike

Specifications

DESCRIPTION

The Washington Postlite Luminaire is styled to replicate the acorn luminaires that lighted streets in the first half of the 20th century. Designed for superior light control, ease of installation, and maintenance, the Washington Postlite has a precision prismatic glass optical system for true street lighting performance as well as beauty.

OPTICAL ASSEMBLY

The optical assembly is a precisely molded thermal resistant borosilicate glass reflector and refractor. The upper portion of this system incorporates a series of reflecting prisms that redirect over 50% of the upward light into the controlling refractor while allowing a soft uplight component to define the traditional acorn shape. Two decorative aluminum top cover options are available. The lower portion uses precisely molded refracting prisms to control the distribution of light to maximize utilization, uniformity, and luminaire spacing. Two unique optical assemblies are available, designed for IES type III, and type V distribution.

LUMINAIRE HOUSING

A decorative leaf style cast aluminum luminaire housing, cradles the optical assembly and provides an enclosure for the plug-in electrical module. A slipfitter will accept a 3 inch high by 2-7/8 inch to 3-1/8 inch O.D. pipe tenon.

ELECTRICAL MODULE / LUMINAIRE HOUSING DOOR

The decorative leaf style cast aluminum housing door contains the electronic components and is held in place by a hinge and latch. An electrical plug connects to the receptacle in the luminaire housing to complete the wiring. The housing door has a hinge and latch mounted to it so as to allow for tool-less luminaire entry.

DRIVER

AS drivers are programmable dimmable drivers, with 0-10V control leads and AH drivers are dimmable (0-10V) drivers.

FINISH / MATERIAL

The luminaire is finished with polyester powder paint to insure maximum durability. All castings utilize aluminum for maximum corrosion resistance and all exposed hardware is corrosion resistant.

NOTE

The luminaire is CSA listed as suitable for wet locations.
The luminaire housing is rated IP65 and the optical system IP66 rated.

Washington Postlite Enhanced® LED Series Luminaire

Prismatic Style: Glass Washington
Housing Size: Utility Washington

DECORATIVE OUTDOOR

HOLOPHANE®
LEADER IN LIGHTING SOLUTIONS
An AcuityBrandsCompany

THIS DRAWING, WHEN APPROVED, SHALL BECOME THE COMPLETE SPECIFICATION FOR THE MATERIAL TO BE FURNISHED BY HOLOPHANE ON THE ORDER NOTED ABOVE, A UNIT OF SIMILAR DESIGN MAY BE SUPPLIED, BUT ONLY AFTER APPROVAL BY THE CUSTOMER IN WRITING. ON POLE ORDERS AN ANCHOR BOLT TEMPLATE PRINT WILL BE SUPPLIED WITH EACH ANCHOR BOLT ORDER TO MATCH THE POLE PROVIDED. THIS PRINT IS THE PROPERTY OF HOLOPHANE AND IS LOANED SUBJECT TO RETURN UPON DEMAND AND UPON EXPRESS CONDITION THAT IT WILL NOT BE USED DIRECTLY OR INDIRECTLY IN ANY WAY DETRIMENTAL TO OUR INTERESTS, AND ONLY IN CONNECTION WITH MATERIAL FURNISHED BY HOLOPHANE.

ORDER #:	
TYPE:	
DRAWN:	RAF
DATE:	6-16-2016
DWG #:	LUM_WSE2

©2009 ACUITY BRANDS LIGHTING, INC. All Rights Reserved